The Best Carpet Cleaning You Have Ever Seen!

Most Cleaners Use A Manual Extraction Wand

* Cleans from only 2 directions (back and forth) with a couple of cleaning passes
* Relies on the strength and energy of the worker
* Leaves many tough stains and shadowing in the carpet

We Use the Rotovac DHX!
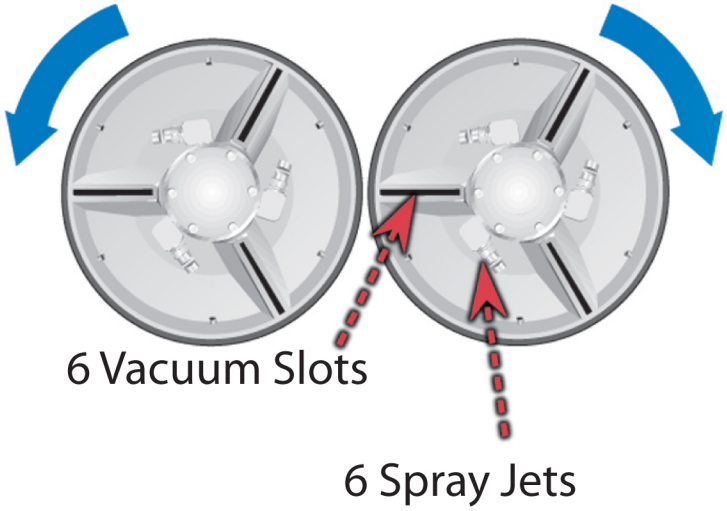
* Cleans from all directions with hundreds of cleaning passes
* High torque motors do not get tired so the quality is consistent throughout the entire job
* Restores matted traffic areas and removes tough stains and shadowing that the manual wand leaves behind