COMMANDER & H.O.

(LIQUID COOLED)

Owner's Manual

A Complete Owner Operational/Service Guide

NOTICE

THIS MANUAL MUST BE READ AND FULLY UNDERSTOOD BEFORE THE OPERATION OF EQUIPMENT DESCRIBED HEREIN.

COMMANDER & H.O. OWNER'S MANUAL © July 2007 v2.0 White Magic Inc. All Rights Reserved.

"OUR FUTURE DEPENDS ON YOUR COMPLETE SATISFACTION"

White Magic Inc. 11 Main Street, Salisbury, MA 01952 - TEL# (978)465-2287 - FAX# (978)462-9170 - WEB: www.whitemagicinc.com

TABLE OF CONTENTS

Section 1 - Safety and Precautions

1. Safety First
2. Danger
3. Warning
4. Caution
5. Identification
6. Safety & Precautions

Section 2 - General Information

1. Welcome letter
2. General Information
3. Operation Systems
4. Machine Specifications
5. Spare Parts Recommendations

Section 3 - Responsibilities

1. Purchaser's Responsibilities
2. Distributor's Responsibilities
3. RMA Procedure

Section 4 - Installation

1. General Installation Notes
2. Tools Required
3. Vehicle Preparation
4. Placing Machine Into Vehicle
5. Blower Exhaust Installation
6. Overflow Installation
7. Fuel Line Hookup
8. High Altitude Operations
9. Local Water Precautions
10. Water Softener
11. Waste Water Disposal
12. Submount Water Tank Procedure
13. Recovery Tank Pump Out System
14. Pump Out Operation

Section 5 - Operations

1. Fluid Levels
2. Chemical Mix
3. Close Following Valves
4. Open Following Valves
5. Set Face Panel Switches
6. Hoses and Quick Connectors
7. Start Engine and Prime Chemical Pump
8. Machine Adjustments and Tests
9. Machine Shutdown Instructions
10. Winter Operation and Winterization
11. Water Extraction Operation
12. Upholstery Cleaning Operation

Section 6 - Cleaning and Chemicals

1. Cleaning and Chemicals
2. Chemical Mixing
3. Over Wetting

Section 7 - Maintenance

1. Overall Machine Maintenance
2. Operational Maintenance
3. Engine
4. Blower
5. Pump
6. Filters
7. Plumbing
8. Waste Tank Recovery
9. Battery
10. Hose Reels
11. Machine Body
12. Waste Drain Valve
13. Hoses
14. Heat Exchangers
15. Pulse Pump
16. Chemical System
17. Heat Diverter
18. Wands
19. Accessories

Section 8 - Troubleshooting

1. Engine Troubleshooting
2. Vacuum Troubleshooting
3. Blower Troubleshooting
4. High Pressure Pump Troubleshooting
5. Heating System
6. Electrical Troubleshooting
7. Belt(s) Troubleshooting

Section 9 - Warranty

1. *KOHLER*® Certification Letter
2. Platinum Guarantee Warranty Plan

Section 10 - General Parts Identification

1. External Features and Benefits
2. Internal Features and Benefits

Section 11 - Parts & Drawings

1. Accessories
2. High Pressure Schematic
3. Engine Assembly
4. Blower Assembly
5. Heat Exchange Assembly
6. Pump Assembly
7. Water Box
8. Temperature Control Assembly
9. Face Panel Assembly (Lower)
10. Face Panel Assembly (Hydraulic)
11. Face Panel Assembly (Electrical)
12. Wiring Schematic

Section 12 - Component Manuals

1. *KOHLER*® Owner's Manual
2. *ROOTS*™ Blower Manual
3. *CAT PUMP*® Service Manual
4. *CAT PUMP*® 5CP Specification Sheet
5. *CAT PUMP*® Crankcase Oil Material Safety Data Sheet

SAFETY FIRST!

You will find symbols and stickers throughout this manual and on the components of this truck mounted carpet cleaning machine. The labels and notes are there to warn of the possibility of personal injury. There are warnings throughout this manual that will aid you in the safe and proper use of this equipment.

READ ALL INSTRUCTIONS CAREFULLY
BEFORE ATTEMPTING TO OPERATE
(or) INSTALL THIS EQUIPMENT.

You will also find the major component manuals, which have their own specific operational/ safety instructions. Each of these components are also specifically labeled warning of the potential of personal injury and safe operations.

Careful operation and your full understanding on how the components work is your best insurance against any accident and your best opportunity for the machines longevity. All operators of this machine should have a full understanding of the operation, maintenance and safety requirements. It is the equipment owner's responsibility for the safe operation and instruction of other operator's use of the equipment.

DANGER

- Know your equipment and the limitations of it.
- Always keep your machine in good working condition.
- Follow the maintenance schedule and recommendations for your equipment.
- Always instruct other operators to the full extent required for safe & effective operation.
- DO NOT modify your equipment from it's original condition.
- Unauthorized modifications to the machine and it's related components could severely impede the safety and function of the unit as well as VOID the warranty.

WARNING

- DO NOT operate the machine while under the influence of alcohol, drugs, medication or if fatigued.
- DO NOT wear loose clothing as the unit has moving/rotating parts.
- Be aware of your surroundings and the machine's operation.
- DO NOT remove the machine's cover during operation. This helps direct the proper air flow around the unit and protects you from moving parts.
- Always remove the starter key when not in operation.

WARNING

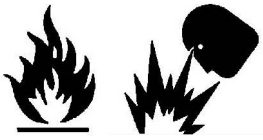

- Keep the machine clean.
- Keep the unit free from debris, rags and any flammable fluids to avoid fire.
- NEVER operate your machine from a portable fuel container.
- DO NOT smoke around the machine or it's components. Fuel is extremely flammable and explosive under certain conditions.
- Always operate your machine with the van doors open for proper ventilation, a roof vent may be recommended.

DANGER

- Engine exhaust fumes are very harmful.
- Poisonous carbon monoxide gas hazard.
- This machine must be operated only in a well ventilated area.
- DO NOT remain in vehicle with machine in operation.
- Carbon Monoxide is an odorless, tasteless gas that can cause severe sickness or death.

WARNING

- DO NOT operate the unit near exposed materials that could catch fire (dry grass, oil, combustible materials, etc.).
- Check that wires and cabling are in good condition and all connections clean.
- Bare or frayed wires can cause a shock and sparks could result in fire.

CAUTION

- Hot water under pressure.
- DO NOT operate this machine at higher pressures or temperatures than recommended. Doing so may cause component failure and thus serious injury.
- Be cautious of any escaping liquid, the machine achieves very high temperatures which could result in injuries/burns.
- This unit contains pressurized systems, be careful around all fittings, hoses and components.
- Be alert of pressure when disconnecting any device from the system.
- Always relieve any pressure when disconnecting devices or working on the machine.

WARNING

- This machine gets hot. To avoid burns always assume the unit is hot and allow enough time for the unit to properly cool before attempting to touch any part of the unit.
- Extreme heat danger.
- Stay clear of engine exhaust components, heat exchangers and hot water plumbing components. Failure to do so may cause severe burns.

CAUTION

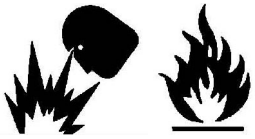

- DO NOT operate this machine with heat shields removed.
- The battery is an explosive hazard.
- Keep all sparks and flames away from the battery.
- Properly slow charge the battery when required.
- Never charge a frozen battery, explosion may occur.
- Use common sense.

WARNING

- Keep hands and clothes clear of all rotating equipment.
- DO NOT run this machine unless all guards are in place. Failure to heed this warning may cause severe injury.
- Be sure that all parts have stopped rotating before attempting to check or make adjustments to the unit.
- Keep body parts and materials away from rotating parts or personal injury could result.
- DO NOT run the machine with any of the safety guards or covers detached.

Important:

- Discard any used oil in accordance with used motor oil *(HAZARDOUS WASTE).*
- Follow your specific local codes for disposal in your area.
- Be mindful of the environment.
- Before draining any fluid or waste observe all regulations for the disposal of such items.
- DO NOT pour waste onto the ground, down a drain, or into any water source.

DANGER

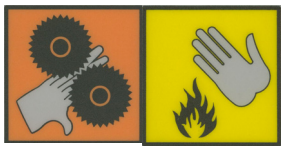

- Keep a fire extinguisher and first aid kit available at all times.
- Keep all warning/caution labels clean and free of obstructions.
- Replace any damaged or missing labels with new labels.

DANGER

- **NEVER** recover flammable liquid or chemicals during any phase of water recovery.
- Flammable liquids or Chemicals can become explosive.
- Use extreme caution and know what you are recovering into the system before you start any job.

IDENTIFICATION

(Identification of stickers, symbols and notes.)

Universal Symbols

FUMES

MOVING PARTS

HOT

EXPLOSION

SHOCK

FIRE

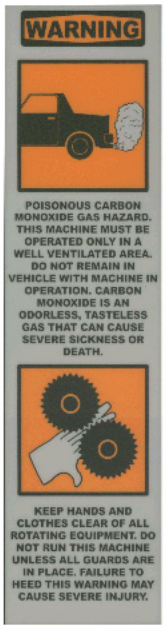

White Magic Inc.
WARNING label.

White Magic Inc.
CAUTION label.

White Magic Inc.
VALVE label.

White Magic Inc.
EXTREME HEAT label.

White Magic Inc.
KEEP HANDS CLEAR label.

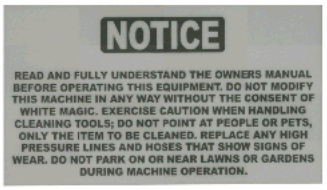

White Magic Inc. NOTICE label.

White Magic Inc.
PROUDLY MADE label.

White Magic Inc.
GREASE WEEKLY label.

White Magic Inc.
SERIAL NUMBER plate.

DANGER

Indicates an imminently hazardous situation which, if not avoided, WILL result in death or serious injury.

WARNING

Indicates an potentially hazardous situation which, if not avoided, COULD result in death serious injury or property damage.

WARNING

Indicates an potentially hazardous situation which, if not avoided, COULD result in FIRE causing death, serious injury or property damage.

CAUTION

Indicates an potentially hazardous situation which, if not avoided, MAY result in minor/ moderate injury or property damage.

TROUBLESHOOTING

Identifies a specific area or component section for troubleshooting a problem.

Important:

Indicates that equipment or property damage could result if instructions are not followed.

NOTE:

Gives helpful information

PROBLEM:

Identifies a specific problem or specific problem area.

Safety Precautions

To ensure safe operations please read the following statements and understand their meaning. Also refer to your equipment owner's manual for other important safety information. This manual contains safety precautions which are explained below. Please read carefully.

WARNING

Warning is used to indicate the presence of a hazard that *can* cause *severe* personal injury, death, or substantial property damage if the warning is ignored.

CAUTION

Caution is used to indicate the presence of a hazard that *will* or *can* cause *minor* personal injury or property damage if the caution is ignored.

NOTE

Note is used to notify people of installation, operation, or maintenance information that is important but not hazard-related.

For Your Safety!

These precautions should be followed at all times. Failure to follow these precautions could result in injury to yourself and others.

WARNING

Explosive Fuel can cause fires and severe burns.

Stop engine before filling fuel tank.

Explosive Fuel!

Gasoline is extremely flammable and its vapors can explode if ignited. Store gasoline only in approved containers, in well ventilated, unoccupied buildings, away from sparks or flames. Do not fill the fuel tank while the engine is hot or running, since spilled fuel could ignite if it comes in contact with hot parts or sparks from ignition. Do not start the engine near spilled fuel. Never use gasoline as a cleaning agent.

WARNING

Hot liquid can cause severe burns.

Do not loosen radiator cap while engine is operating or warm to the touch.

Hot Liquid!

The liquid coolant can get extremely hot from operation. Turning the radiator cap when the engine is hot can allow steam and scalding liquid to blow out and burn you severely.

Shut off machine. Only remove radiator cap when cool enough to touch with bare hands. Slowly loosen cap to first stop to relieve pressure before removing completely.

WARNING

Hot Parts can cause severe burns.

Do not touch engine while operating or just after stopping.

Hot Parts!

Engine components can get extremely hot from operation. To prevent severe burns, do not touch these areas while the engine is running, or immediately after it is turned off. Never operate the engine with heat shields or guards removed.

California Proposition 65 Warning

Engine exhaust from this product contains chemicals known to the State of California to cause cancer, birth defects, or other reproductive harm.

(Excerpt from: KOHLER AEGIS® Engine Owners Manual Command Series LH 630-775 Liquid Cooled - Horizontal Crankshaft, pg 2.)
(See Kohler Manual for full instructions)

Safety Precautions (Cont.)

⚠ WARNING

Accidental Starts can cause severe injury or death.

Disconnect and ground spark plug leads before servicing.

Accidental Starts!
Disabling engine. Accidental starting can cause severe injury or death. *Before working on the engine or equipment, disable the engine as follows: 1) Disconnect the spark plug lead(s). 2) Disconnect negative (-) battery cable from battery.*

⚠ WARNING

Carbon Monoxide can cause severe nausea, fainting or death.

Do not operate engine in closed or confined area.

Lethal Exhaust Gases!
Engine exhaust gases contain poisonous carbon monoxide. Carbon monoxide is odorless, colorless, and can cause death if inhaled. Avoid inhaling exhaust fumes, and never run the engine in a closed building or confined area.

⚠ WARNING

Explosive Gas can cause fires and severe acid burns.

Charge battery only in a well ventilated area. Keep sources of ignition away.

Explosive Gas!
Batteries produce explosive hydrogen gas while being charged. To prevent a fire or explosion, charge batteries only in well ventilated areas. Keep sparks, open flames, and other sources of ignition away from the battery at all times. Keep batteries out of the reach of children. Remove all jewelry when servicing batteries.

Before disconnecting the negative (-) ground cable, make sure all switches are OFF. If ON, a spark will occur at the ground cable terminal which could cause an explosion if hydrogen gas or gasoline vapors are present.

⚠ CAUTION

Electrical Shock can cause injury.

Do not touch wires while engine is running.

Electrical Shock!
Never touch electrical wires or components while the engine is running. They can be sources of electrical shock.

⚠ WARNING

Rotating Parts can cause severe injury.

Stay away while engine is in operation.

Rotating Parts!
Keep hands, feet, hair, and clothing away from all moving parts to prevent injury. Never operate the engine with covers, shrouds, or guards removed.

(Excerpt from: KOHLER AEGIS® Engine Owners Manual Command Series LH 630-775 Liquid Cooled - Horizontal Crankshaft, pg 3.)
(See Kohler Manual for full instructions)

SAFETY & PRECAUTIONS

- **This equipment should be operated by fully trained personnel familiar with all the information contained within this manual.**

- **Read this manual carefully before operating the machine. It contains important information on how to run your machine safely and efficiently.**

- **Do not operate the machine with unauthorized people in or around the vehicle. You should post caution signs.**

- **Be aware and cautious around moving parts in the machine (e.g. belts, pulleys, etc.).**

CAUTION

- **Use caution in handling the wand and hose. Check for any leaks. Extreme hot water will cause severe burns. Never point chemical tool at anything other than the task at hand. Hot water under high pressure will damage finishes and is unsafe for people or pets.**

DANGER

- **Assure that the machine engine exhaust is vented out of the vehicle properly. Never allow people inside the vehicle with the doors closed and the machine running.**

- **Machines using internal combustion engines must not be enclosed within a vehicle with the doors closed. Excessive temperatures within the engine will result in engine failure and *VOID* the warranty. Always operate the machine with the vehicle doors open. A roof vent may be required.**

WARNING

- **Be cautious when drilling holes through the vehicles floor. Many vehicles have critical components mounted directly below the floor that could be damaged.**

- **Only experienced technicians should be allowed to install the machine.**

- **Assure that the machine is adequately bolted to the floor. Periodically check and re-tighten the bolts if necessary.**

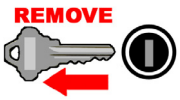

- **When not in operation, always remove the key from the machines ignition.**

WARNING

- **When installing the machine, never use an electrical device to cut the gas line.**

NEVER:

Under any circumstances may a portable fuel container be used or carried in a vehicle equipped with White Magic Equipment. This practice is unsafe and illegal in most areas. Only approved systems are permitted to fuel White Magic Equipment.

NEVER

- **Be sure to put exhaust diverter switch to "Water Recovery" when performing water extraction.**

CAUTION

- **Never operate the system with the pump pressure set less than 300 PSI or more than 1200 PSI.**

- **Never fill fresh water tank/water box with warm or hot water.**
- **Never allow system to freeze. Refer to winterization procedure.**
- **Never operate the machine without water in the water box; system components will be damaged.**

- **Never operate machine with chemical pulse pump turned on and no chemical in chemical jug. The chemical pulse pump will become damaged.**
- **Never operate machine using hard water. Mineral deposits will result and cause failures. Water softeners must be used to prevent this build-up. Periodic descaling may also be necessary to remove deposits.**
- **Never operate machine with engine running at speeds higher than recommended. *[3600 RPM at 13"-14" Hg.]***
- **Never shut-down system without first reducing engine speed to idle *[1000 RPM at 13"-14" Hg.] (or)* without reducing the water temperature to below 150˚.**
- **Never use chemicals not recommended for truck mount use.**
- **Never operate machine with blower vacuum reading higher than 14" Hg. at the inlet of the blower.**

CAUTION

- ***Never:***
  Plug overflow elbow on face of machine. A short piece of hose can be run through the floor if desired. Plugging the overflow elbow will result in permanent damage to system components and could cause unsafe pressure build up.

Dear Customer:

Thank you for selecting White Magic Carpet Cleaning Equipment, we at White Magic take pride in the innovative design and the quality of our equipment and accessories and your selection indicates your approval.

Your purchase is just the beginning of a long relationship between our two companies. The equipment White Magic manufactures should serve you well for years to come. You will be able to properly and safely operate this equipment with the help of your distributor and this manual for reference.

As a White Magic Equipment Owner, you not only have the relationship of the Distributor you bought the equipment from, but also have the support of the White Magic manufacturing family. White Magic will send any bulletins, changes, improvements and new information regarding your equipment to both you and your distributor.

Thank you again for choosing White Magic Incorporated. We will, as we have in the past, continue to do everything possible to ensure that you remain a proud and satisfied White Magic Equipment Owner.

Sincerely,

The White Magic Family

"OUR FUTURE DEPENDS ON YOUR COMPLETE SATISFACTION"

11 Main Street, Salisbury, MA 01952 - Tel (978) 465-2287 - Fax (978) 462-9170 - Web www.whitemagicinc.com

GENERAL INFORMATION

This manual contains installation and operation instructions as well as information required for proper maintenance, adjustment and repair of this machine. Since the first and most important part of repair work is the correct diagnosis of the problem, component manual troubleshooting charts and diagrams have been included for your convenience.

It is important to remember that carpet cleaning machines have many functions to perform at the same time.

- **The engine has to run at a consistent RPM.**
- **The vacuum blower has to recover dirty water.**
- **The high pressure pump has to deliver proper water flow.**
- **The chemical solution has to be injected at the right time.**
- **The heat must be maintained at the proper temperature.**
- **The machine must store the dirty water that is recovered.**

It is important that you read this manual in full and make yourself familiar with all of the components. This will help ensure the continuing life of your carpet cleaning machine.

OPERATION SYSTEMS

The Commander & Commander HO heat exchange system is a highly engineered system design by the White Magic Corporation. The heating system is comprised of exhaust and blower heat that is captured for free heat.

Water is fed into the machine under tap pressure and it flows to the water box. The water is then picked up by the high pressure pump and pressurized to the desired pressure level. The water then splits as demanded by the technician.

The water demanded by the technician flows from the water pressure pump through the heat exchangers then out to the cleaning tool.

When the cleaning solution reaches a preset temperature set by the cleaning technician the machine will go into a divert mode until it calls for more heat, then it goes back into the heat mode. The HeatSmart^{tm} Technology is the first of its kind in the carpet cleaning industry. There is no dumping of fresh water into the recovery tank.

White Magic has put no guess work into this highly advanced cleaning machine. This manual will help you understand, maintain and service your cleaning machine. Follow the directions carefully and you should receive many years of profitable and trouble free operation.

It is important that no section be overlooked in your reading of this manual.

MACHINE SPECIFICATIONS

Frame:	**27" W x 46" L 30" H** **Steel with Epoxy Finish**
Weight:	**570 lbs. (Commander), 620 lbs. (HO)**
Engine:	***KOHLER AEGIS®* 24 HP Engine, 3600 RPM (Commander)** ***KOHLER AEGIS®* 28 HP Engine, 3600 RPM (HO)** **Liquid Cooled, Pressurized with Lubrication** **Oil Filter, Oil Protection Switch, Temp Protection Switch**
Ignition:	**Electronic, Key start**
Vacuum Blower:	***ROOTS™* 45 Blower, 14'' Hg. (Commander)** ***ROOTS™* 47 Blower, 14'' Hg. (HO)**
Pump:	***CAT PUMP®* 5 CP, 5 gpm 1200 PSI Pump** **Pump Clutch for Water Damage** **Pulsation Dampener**
Chemical System:	**Last Step Chemical Injection**
Operating Pressure:	**Up to 1200 PSI**
Heating System:	**Engine Exhaust Heat** **Blower Exhaust Heat**
Instruments:	**Water Pressure Gauge, Liquid Filled** **Hour Meter, Machine Run Time** **Tachometer, Engine RPM** **Vacuum Gauge, Liquid Filled** **Temperature Gauge** **Key Start Ignition, Start/Stop** **Temperature Adjustment Control** **Chemical Adjustment Control** **Pressure Adjustment Control**
Recovery Tank:	**120 Gallon Full Capacity** **Aluminum, Epoxy Finish** **2'' Drain** **Automatic High-Level Shut-off** ***(Optional Automatic Pump Out)***

Cleaning Wand:	**Stainless Steel S-Bend Wand #2-Jet** **Re-buildable Solution Valve**
High Pressure Hose:	**High Temperature Steel Braid / Vinyl Covered** **Hose Rated to 3000 PSI**
Vacuum Hose:	**2'' Reinforced Flexible Hose**
Standard Equipment:	**Platinum Guarantee Warranty Plan** **Commander / HO Framed Assembly** **HeatSmart^{tm} Technology** **Bypass-Less Heat Technology** **Working Temperature 230°+** **Dual Mode Heat Exchangers** **Automatic Heat Diverter** **120 Gallon Recovery Tank** **150 ft. Solution Hose** **150 ft. 2'' Vacuum Hose** **2-Jet Carpet Cleaning Wand** **Chemical Jug** **Battery Box** **Pump Disengagement Clutch** **Last Step Chemical Injection** **Full Instrumentation Panels** **Engine, Blower & Pump Oil Drain** **Machine Installation Package** **Operation Manual**

COMMANDER

Bypass-Less Slide-In System
White Magic's exclusively engineered HEATSMART™ Technology

- ·KOHLER AEGIS® 24 Hp Engine
- ·ROOTS™ 45 Blower
- ·CAT PUMP® 5CP Pump
- ·230°+ Working Water Temp.
- ·120 gal. Recovery Tank (standard)
- ·Automatic Heat Diverters (2)
- ·HEATSMART™ Technology
- ·Pump Disengagement Clutch
- ·Last Stage Chemical Injection
- ·Progressive Silencing System
- ·Pulsation Dampener
- ·150 ft. Vacuum Hose
- ·150 ft. Solution Hose
- ·5 Gallon Chemical Jug w/ SS Holder
- ·12" 2 Jet Scrub Wand
- ·Platinum Warranty

"The Clear Choice"

White Magic Inc.

White Magic Inc.

(800) 422-1128

www.whitemagicinc.com

"GET MORE WITH LESS"

COMMANDER

SPECIFICATIONS

Engine:
KOHLER AEGIS® 24 Hp
Liquid Cooled
Electric Start
Oil Sentry Shut-down
Engine Exhaust Diverter
Coolant Temp. Shut Down

Blower
ROOTS™ 45
345 cfm @ 14 in. Hg. max.
Blower Exhaust Diverter

Pump
CAT PUMP® 5 CP Pump
5 gpm
2000 PSI
Pump Disengagement Clutch
Pulsation Dampener

Recovery Tank
120 gallons (standard)
2" Drain
Automatic High-level Shut-off

Optional Equipment
70 Gallon Fresh Water Tank
External Automatic Pump-Out
Inline Filter Recovery System
Hose Reels
(More Optional Equipment Available)

Heat Exchangers
230°+ Water Temps.
Exclusively Engineered High Efficiency Finned Tube Coil

HEATSMART™ Technology
Bypass-less
No Filters
No Solenoids
No Thermo Relief Valves
Automatic Heat Diverters (2)

Size (Footprint):
27" W x 41" L x 31"
900 lbs.
(Approx. Total System Weight With No Water)

White Magic Inc.
(800) 422-1128
www.whitemagicinc.com

"The Clear Choice"

White Magic Inc. © JULY 2007
COMMANDER L Cutsheet v 1.0

*All features are subject to change without notice. All specifications are subject to change without notice. Major components specifications are manufacturers maximum ratings. System is de-rated for maximum component life. Engine and blower are used to 70-80% capacities. System pressure is set at 1200 PSI.

COMMANDER
HIGH OUTPUT

Bypass-Less Slide-In System

White Magic's exclusively engineered HEATSMART™ Technology

- KOHLER AEGIS® 28 Hp Engine
- ROOTS™ 47 Blower
- CAT PUMP® 5CP Pump
- 230°+ Working Water Temp.
- 120 gal. Recovery Tank (standard)
- Automatic Heat Diverters (2)
- HEATSMART™ Technology
- Pump Disengagement Clutch
- Last Stage Chemical Injection
- Progressive Silencing System
- Pulsation Dampener
- 150 ft. Vacuum Hose
- 150 ft. Solution Hose
- 5 Gallon Chemical Jug w/ SS Holder
- 12" 2 Jet Scrub Wand
- Platinum Warranty

"The Clear Choice"

White Magic Inc.

(800) 422-1128

www.whitemagicinc.com

"GET MORE WITH LESS"

COMMANDER HIGH OUTPUT

SPECIFICATIONS

Engine:
KOHLER AEGIS® 28 Hp
Liquid Cooled
Electric Start
Oil Sentry Shut-down
Engine Exhaust Diverter
Coolant Temp. Shut Down

Blower
ROOTS™ 47
460 cfm @ 14 in. Hg. max.
Blower Exhaust Diverter

Pump
CAT PUMP® 5 CP Pump
5 gpm
2000 PSI
Pump Disengagement Clutch
Pulsation Dampener

Recovery Tank
120 gallons (standard)
2" Drain
Automatic High-level Shut-off

Optional Equipment
70 Gallon Fresh Water Tank
External Automatic Pump-Out
Inline Filter Recovery System
Hose Reels
(More Optional Equipment Available)

Heat Exchangers
230°+ Water Temps.
Exclusively Engineered High Efficiency Finned Tube Coil

HEATSMART™ Technology
Bypass-less
No Filters
No Solenoids
No Thermo Relief Valves
Automatic Heat Diverters (2)

Size (Footprint):
27" W x 41" L x 31"
980 lbs.
(Approx. Total System Weight With No Water)

White Magic Inc.
(800) 422-1128
www.whitemagicinc.com

"The Clear Choice"

White Magic Inc. © JULY 2007
COMMANDER HO-L Cutsheet v 1.0

*All features are subject to change without notice. All specifications are subject to change without notice. Major components specifications are manufacturers maximum ratings. System is de-rated for maximum component life. Engine and blower are used to 70-80% capacities. System pressure is set at 1200 PSI.

Spare Parts Recommendation

Downtime can be very expensive and irritating, because your truck-mount can generate several hundred dollars per day. It is recommended by the manufacturer that you purchase and keep in you truck the parts listed below.

How to Order Parts:

To order parts please call your sales representative (Distributor) from whom you purchased your new White Magic Machine. The distributor more than likely has all of these parts in stock. If further assistance is needed you may call the factory for help.

Distributor Phone Number: _____

White Magic Parts Dept: 1-978-465-2287

White Magic Sales Dept: 1-800-422-1128

Spare Parts List:

QTY.	P/N	DESCRIPTION
1	A005P-2	PULSE PUMP DIAPHRAGM
2	A005P-3	PULSE PUMP CHECK VALVE
1	A005P-5	PULSE PUMP WAFER
2	A005P-9	"O" RING, VALVE CAP
1	A005P-10	"O" RING, MAIN BODY
4	B001	1/4" MALE QUICK DISC. BRASS
2	B002	3/8" MALE QUICK DISC. BRASS
4	B003	1/4" FEMALE QUICK DISC. BRASS
30"	B011	1/4 ID BLACK TUBE
1	B039-8	CMP VALVE REPAIR KIT
4	B063	1/4" BALL VALVE (LOW PRESSURE)
1	B147	1/4" SHUT OFF VALVE
1	A026	1/2" FLOAT VALVE
1	A0285	RECOVER TANK FLOAT SWITCH
2	G036	36" BLOWER V BELT
2	G038	38" PUMP V BELT
1	B135P	POP OFF VALVE

NOTE:

Engine Oil: **30 weight motor oil with a minimum standard of SE, SF, SG.** ***(see charts below)***

Oil Recommendations

Using the proper type and weight of oil in the crankcase is extremely important. So is checking oil daily and changing oil regularly. Failure to use the correct oil, or using dirty oil, causes premature engine wear and failure.

Oil Type

Use high quality detergent oil of **API (American Petroleum Institute) service class SG, SH, SJ or higher**. Synthetic oils may be used. Select the viscosity based on the air temperature at the time of operation as shown in the following table.

NOTE: Synthetic oils meeting the listed classifications may be used with oil changes performed at the recommended intervals. However to allow piston rings to properly seat, a new or rebuilt engine should be operated for at least 50 hours using standard petroleum based oil before switching to synthetic oil.

A logo or symbol on oil containers identifies the API service class and SAE viscosity grade. See Figure 4.

Figure 4. Oil Container Logo.

Refer to "Maintenance Instructions" beginning on page 8 for detailed oil check, oil change, and oil filter change procedures.

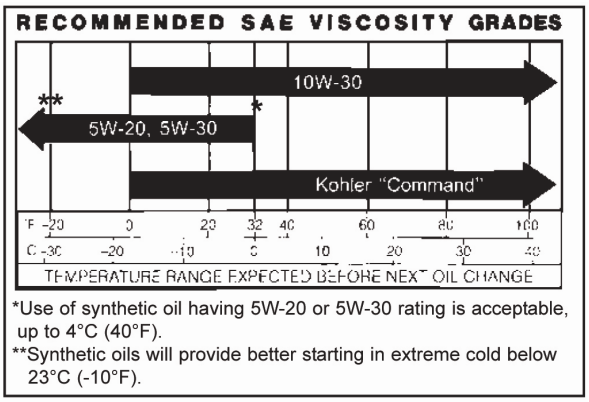

*Use of synthetic oil having 5W-20 or 5W-30 rating is acceptable, up to 4°C (40°F).
**Synthetic oils will provide better starting in extreme cold below 23°C (-10°F).

Figure 3. Viscosity Grades Table.

NOTE: Using other than service class SG, SH, SJ or higher oil or extending oil change intervals longer than recommended can cause engine damage.

(Excerpt from: KOHLER AEGIS® Engine Owners Manual Command Series LH 630-775 Liquid Cooled - Horizontal Crankshaft, pg 4, 5.) (See Kohler Manual for full instructions)

Blower Oil: **50 weight, ISO-220 premium grade industrial type non-detergent oil with: foam, oxidation and rust inhibitors. Automotive type oils are NOT recommended.**

Blower Grease: **NLGI #2 premium grade, synthetic grease with high temperature 300° service temperatures, moisture resistant and good mechanical stability.** ***(such as Shell Darina NLGI grade 2 or equal)***
Note: Lithium base greases are NOT recommended.

For satisfactory operation of mechanical seals, synthetic lubricants are recommended (Check suitability to gases before using.)

Oils:

(1) ROOTS™ GT Synthetic Lubricant ROOTS P/N 13-106-001 (1) one quart ISO-220

(2) Mobil SHC 600 Series Lubricating Oils

Grease:

ROOTS™ Synthetic Grease – NLGI # 2
ROOTS P/N T20-019-001 (1) one 14 oz tube

(Excerpt from: Dresser ROOTS™ Installation operational Maintenance Manual Universal RAI & RAM SERIES, pg 13.)
(See Dresser ROOTS™ Manual for full instructions)

TABLE 2

RECOMMENDED OIL GRADES

Ambient Temperature °F (°C)	Viscosity Range SSU at 100°F	ISO No.	Approximate SAE No.
Above 90° (32°)	1000-1200	320	60
32° to 90° (0° to 32°)	700-1000	220	50
0° to 32° (-18° to 0°)	500-700	150	40
Below 0° (-18°)	300-500	100	30

Use a good grade of **industrial type** non-detergent, rust inhibiting, anti-foaming oil and of correct viscosity per Table 2. *ROOTS™ synthetic oil (ROOTS P/N 813-106-) is highly recommended. ROOTS™ does **NOT** recommend automotive type lubricants, as they are not formulated with the properties mentioned above.

(Excerpt from: Dresser ROOTS™ Installation operational Maintenance Manual Universal RAI & RAM SERIES, pg 23.)
(See Dresser ROOTS™ Manual for full instructions)

Pump Oil: ***CAT PUMP®* Oil, *(approx. 19 Oz.)* or ISO 68 Multi-viscosity petroleum based non-detergent Hydraulic oil. *(oil level is increased slightly above the center dot to assure adequate lubrication for reverse pump rotation)***

PREVENTATIVE MAINTENANCE CHECK-LIST

Check	Daily	Weekly	50 hrs.	500 hrs.*	1500 hrs.**	3000 hrs.**
Clean Filters	x					
Oil Level/Quality	x					
Oil Leaks	x					
Water Leaks	x					
Belts, Pulley		x				
Plumbing		x				
Initial Oil Change			x			
Oil Change				x		
Seal Change					x	
Valve Change						x
Accessories					x	

* If other than CAT PUMPS special multi-viscosity ISO68 oil is used, change cycle should be every 300 hours.

** Each system's maintenance cycle will be exclusive. If system performance decreases, check immediately. If no wear at 1500 hours, check again at 2000 hours and each 500 hours until wear is observed. Valves typically require changing every other seal change.

Duty cycle, temperature, quality of pumped liquid and inlet feed conditions all effect the life of pump wear parts and service cycle.

** Remember to service the regulator/unloader at each seal servicing and check all system accessories and connections before resuming operation.

Refer to video for additional assistance.

(Excerpt from: CAT PUMP® CP PLUNGER PUMP SERVICE MANUAL rev F 11217, preventative maintenance check-list)
(See CAT PUMP® Manual for full instructions)

Important: Discard any used oil in accordance with used motor oil *(HAZARDOUS WASTE)* in your area. Be mindful of the environment. Before draining any fluid or waste observe all regulations for the disposal of such items.

PURCHASER'S RESPONSIBILITIES:

- To purchase a heavy duty 42-60 amp hour garden tractor battery and have it slow charged.
- If the battery is not fully charged, damage can occur to the engine charging system of the machine.
- While the machine is being installed it is your responsibility to read the operation manual and to get familiarized with the information contained within.
- Special Attention should be paid to all warnings and cautions that are in the operations manual.

It is the *RESPONSIBILITY* of the *OPERATOR* to make every effort to diagnose a problem should one occur *BEFORE* calling your DISTRIBUTOR for assistance. This operational and service manual has been specifically developed for *SELF-HELP* and *DIAGNOSIS*. Most if not all problems can be simply diagnosed with common sense, a good understanding of how your machine works and this guide.
***PLEASE* take the time to fully read and understand this manual before operating the equipment. This manual should always be in your truck for easy reference. You will need this manual handy if you ever have the need to call for assistance. You will be asked to refer to this manual should a problem arise that you cannot diagnose. It is standard practice to go through *EACH* step in the troubleshooting section while diagnosing the equipment over the phone with your DISTRIBUTOR.**

IF A PROBLEM SHOULD ARISE …

STEP 1 : DIAGNOSE THE PROBLEM *YOURSELF.*

Go through the manual and try to self-diagnose the problem. Remember that most problems that occur are minor and just require a good understanding of your equipment and its operation.

STEP 2 : CALL *YOUR* DISTRIBUTOR.

Let your knowledgeable distributor diagnose/repair any issue that may be occurring. If need be your distributor may contact White Magic directly for further diagnosis or parts ordering. Note that you cannot order parts directly from the factory or get pricing for parts. You must contact your distributor for this information.

DISTRIBUTOR RESPONSIBILITIES:

ACCEPTANCE OF SHIPMENT:

- *If the equipment shows any outward signs of damage, **DO NOT** sign the delivery receipt until you have closely inspected the machine and the shipment.*
- *Damage must be noted on the delivery receipt for any freight claim to be made.*
- *If damage has occurred it is **YOUR** responsibility to make a claim with the freight company unless shipment was **PRE-PAID**.*

RESPONSIBILITIES:

It is the responsibility of the salesperson that sold the equipment to the customer for supervising the correct installation of the equipment package in the vehicle. The salesperson is responsible for thoroughly training the customer in the safe operation and maintenance of the equipment.

- Fully complete the Truckmount Document Package with all pertinent information and return to White Magic Inc.
- Give a full copy of the Truckmount Document Package to the purchaser for their records and serial number information.
- Thoroughly review the operation manual with the customer.
- How to correctly start and shut down the machine.
- How to correctly clean with the machine.
- Where and how often to check and change component oil levels.
- How the machine systems work.
- How to troubleshoot the machine.
- How to do basic repairs.
- Safety precautions and their importance.
- Freezing damage and how to avoid it.
- Hard water damage and how to avoid it.
- Review of warranty procedures.
- Use of Water Softening Systems and why to use them.

(RMA) PROCEDURE:

By following these steps we will be able to help you faster and more accurately thus saving everyone's time.

As we develop new and innovative ways to better serve you we will require some consistency in the way that information is exchanged. Whether you are calling to replace a part or are having technical problems with a machine by providing the serial number to us (or) your distributor when you call we will be able to bring your machine up on our computers. This will allow us to address your issues and tie it all back to the equipment for any future references that may be needed.

Please make sure the Very Important **Truckmount Document Package** is returned back to White Magic I*nc.* fully completed as soon as the installation is completed. This will be entered into our system upon return.

RMA is procedure is as follows: Faulty part is called into White Magic Inc. White Magic confirms failure over the phone by further diagnosis. If part is determined to be failed, RMA number is issued and part is shipped and billed according to account type. To be covered under warranty the defective parts must be returned with an authorized RMA# to White Magic Inc. within (14) DAYS of failure. When part is recieved, it is evaluated and credit is approved or denied based upon testing and evaluation. Credits will be issued once a month at the end of every month. No liability shall be attached to White Magic Inc. until products have been paid for.

If a claim is denied you will need to decide what you want us to do with the merchandise. If no response is given within the timeframe given the items will be discarded. Items returned without the proper paperwork, information or pre-authorization will NOT be considered. Once a RMA# is issued you will have 14 days to return the items to us, if the items are not returned with in the given timeframe all rights to a warranty claim will be forfeited. All claims need to be documented with the service department within 30 days of discovery.

INSTALLATION:

Read the entire installation procedure carefully before starting to assure a correct and safe installation. The most common machine installation is into a full size van with the machine being mounted facing out the side door (See Fig. 4-1). For installations into cube vans, mini vans, trailers, etc., consult the factory for special instructions. The engine MUST have access to adequate fresh air to avoid overheating. Failure to provide adequate ventilation will VOID the warranty. Roof vents or forced ventilation may be required. Prior to installation, unpack the machine and check the parts against the packing list. Contact White Magic factory immediately before starting if a discrepancy exists.

The following is a summary of the installation process.

- **Assure that a vehicle of proper load carrying capacity is used.**
- **Assure that a suitable layout plan is available for this van with the equipment and accessories used.**
- **Install through-floor fittings for gasoline fuel lines and fuel tank system *(if required).***
- **Place the machine, recovery tank and accessories properly into the vehicle and securing them with the proper bolts.**
- **Connect gasoline lines.**
- **Connect the battery.**
- **Connect machine recovery tank and accessories.**
- **Check the pump, vacuum blower and engine oil levels prior to starting the machine.**
- **Start the machine to check the engine to see that all systems function normally.**
- **Check all hoses, wands and accessories for correct operation.**
- **The machine may have been winterized for shipment. Make sure the process is reversed before operation.**

TOOLS REQUIRED:

The following is a list of tools needed to install the slide-in-machine.

- **Fork Lift**
- **Electric Drill**
- **Reciprocating saw**
- **Common Hand Tools (wrenches, hammers, allen wrenches, etc.)**
- **1/2'' and 7/16'' Drill Bits**
- **1'' and 3/4'' Hole Saw *(3'' hole saw is required if running exhaust through the floor, 5" hole saw if adding a fuel tank)***
- **Tube of Clear Silicone**
- **Tube of High Temperature Silicone Gasket Maker**

VEHICLE PREPARATION:

When selecting a truck, remember the preferable vehicle for a Commander HO installation is a cargo van with heavy-duty suspension package and a half ton capacity. When using a fresh water tank, hose reel, shelf's, etc., a three quarter ton or larger capacity vehicle with a 2,400 pound payload is required. An extended van is preferred for either case to provide adequate storage.

The manufacturer recommends that the floor of the vehicle should be protected with a spray on coating *(such as 'LINEX' or 'RHINO LINER')*.

PLACING MACHINE INTO VEHICLE:

Side Door Installation:

Most truckmounts are installed through the side door. This gives good weight distribution and allows for rear access for accessories and hoses as well as access to side of the machine for service. This will make it easier to perform maintenance or repairs on the machine.

Placement of Major Components

Figure 4-1 shows the approximate location of major components in a typical van installation. The Vacuum Hose Reel, Floor Mount Solution Hose Reel and Filter Box are optional equipment.

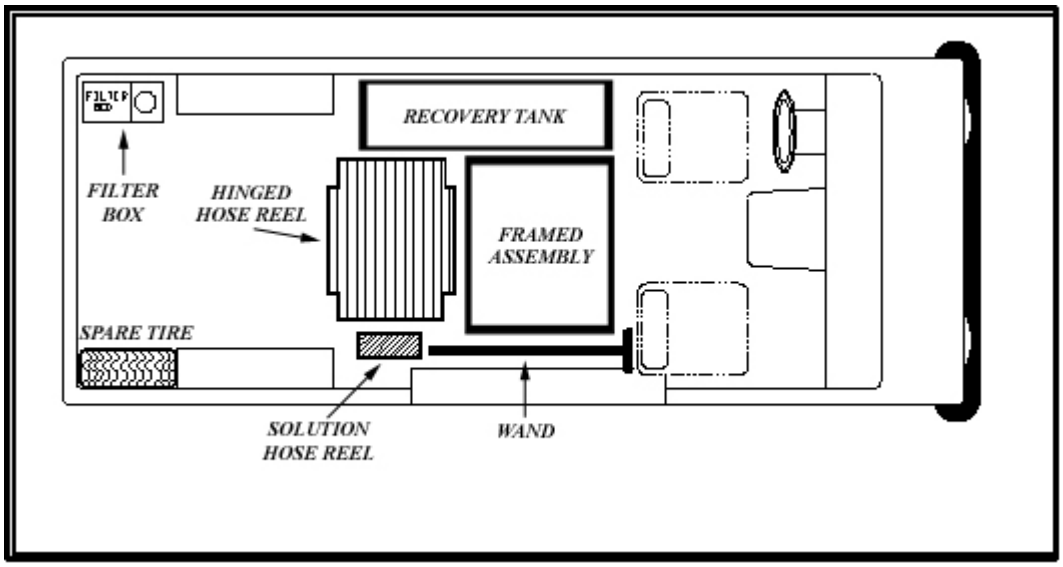

Figure 4-1: Location of Major Components in Van

Signature Series Layouts

The Rebel, Commander, Commander H.O. have been specifically designed and engineered to be installed into a standard size van (Chevy, Ford, Dodge) with the machine and hose reels accessible though the side door. This does not prevent a similar package to be developed for a customer with hose reels accessible through the back door if required.

SIDE DOOR VIEW

Signature Series Layouts

RE500 electric hose reel shown with the RE025 Lay Down Hose Reel Hinge. The RE 025 allows for the hose reel to be swung back toward the rear of the van. Once the reel is placed backwards it provides additional space to service the machine. This hose reel layout is also available for PRO-1900 installs as well.

Signature Series Layouts

Cutaway & Tilt Cab Box Truck

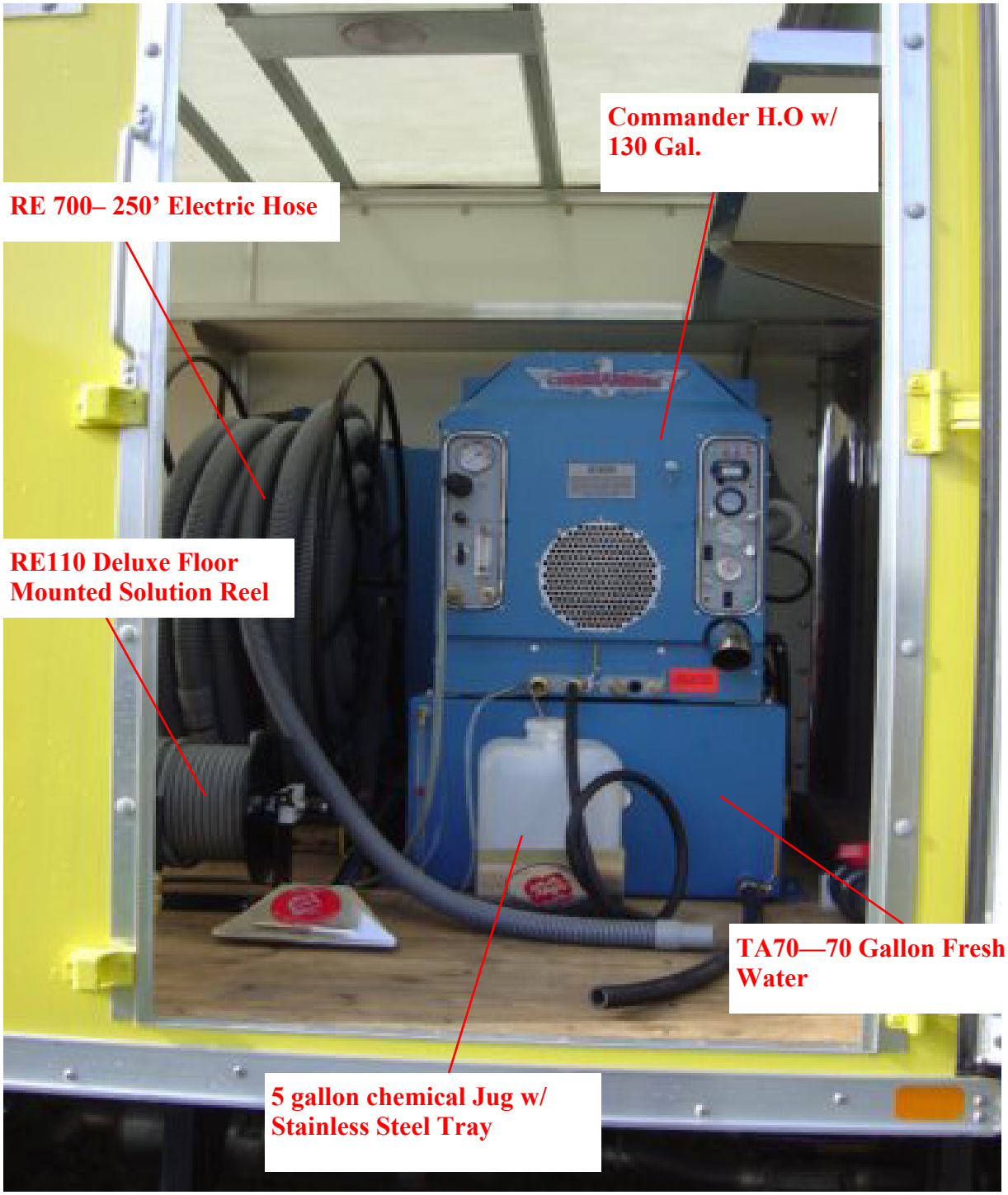

Side Door View

Signature Series Layouts

Cutaway & Tilt Cab Box Truck

Installed into a 14' cube the Commander H.O. takes up minimum space. Perfect for Restoration contractors. This Layout provides exceptional platform for delivering large numbers of Dryers and Dehumidifiers to the job site. Allowing less trips by technicians back to the shop for additional gear.

Rear Door View

Installation:

CAUTION ***Use all standard precautions when working on the vehicle. Place vehicle in park, remove key, disconnect negative battery cable, chock wheels, etc.***

- **Install auxiliary fuel tank system if required.**
- **Remove Commander HO top and side console covers as applicable.**
- **Place recovery tank *(Refer to Fig. 4-2)* into van locating it directly behind the driver seat with drain towards front. Do not mount recovery tank at this time.**
- **Position the Commander HO and fresh water tank into the vehicle using a fork lift.**
- **Position the recovery tank and machine as shown in the recommended placement pictures. Check for adequate motion of the driver's seat in the upright position.**

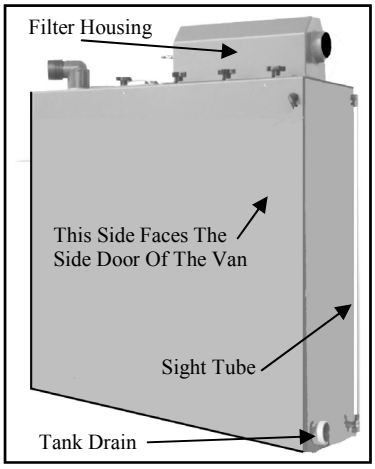

Figure 4-2: Recovery Tank

** Drain now on right side of tank

- **Move the driver's seat fully to the rear position. Position the recovery tank and Commander HO framed assembly as close as possible toward back wall and next to the driver's seat. For vehicle seats without built in head rests, allow 12'' minimum clearance between the seat and the tank.**
- **Check that there is enough room to remove and clean filter assembly when tank is installed.**
- **Be cautious when drilling any holes through the vehicle floor. Many vehicles have critical components mounted directly below the vehicle floor that could be damaged by a misplaced drill bit.**
- **Mount the recovery tank to the vehicle floor by drilling two (2) 7/16'' clearance holes in the front and rear of both tank mounting tab's, (4) holes total. Mount the machine to the floor by drilling one (1) 7/16'' clearance hole in each mounting tab. Tighten the hardware furnished with the machine securely. *(Fig. 4-3)***

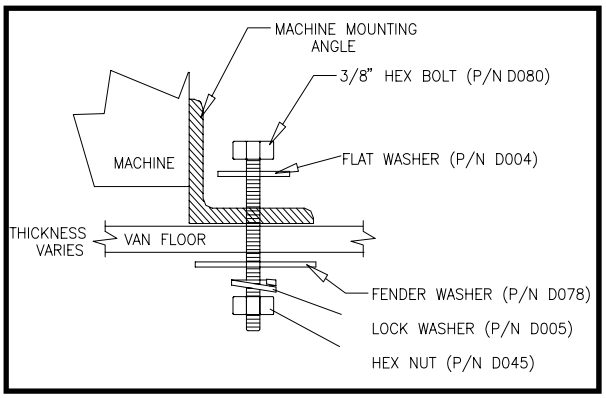

Figure 4-3: Bolt Configuration

- **Before mounting machine to the floor, attach mounting brackets on the rear of machine to the recovery tank in two (2) places.**

Rear Door Installation:

- **Rear mounting the machine is usually not recommended.** ***(Except in a cube truck – consult the factory for recommendations)***

Recovery Tank and Drain Installation:

- **Install the filter and housing assembly onto the top of the recovery tank using the six (6) hand turn knobs.** ***(see Fig. 4-4)*** **Assure that the output connector of the filter assembly slips into the blower input hose properly.**

- **Connect (1) of (2) brown wires from recovery tank to green wire (Ground from face of recovery tank). Connect the second brown wire to the black wire from the kill override switch.**

- **The recovery tank drain piping exits toward the front and immediately turns 90° and runs toward the vehicle's side door. The A.B.S. piping parts should be assembled together with the pipe being cut to the proper length before the parts are glued.** ***(see Fig. 4-5)***

- **Disassemble drain parts and reassemble, gluing each part in its proper place. To glue parts together, apply glue liberally to the part being glued, then slip together and rapidly rotate parts to the desired position. This glue sets up in a matter of seconds.**

- **After the connections are glued together, install the drain clamp by sliding it around the pipe locating it next to the drain valve.**

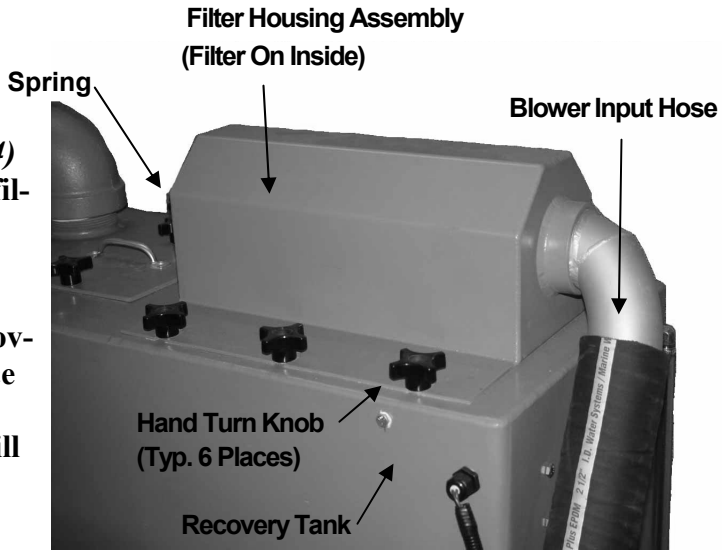

Figure 4-4: Recovery Tank Top

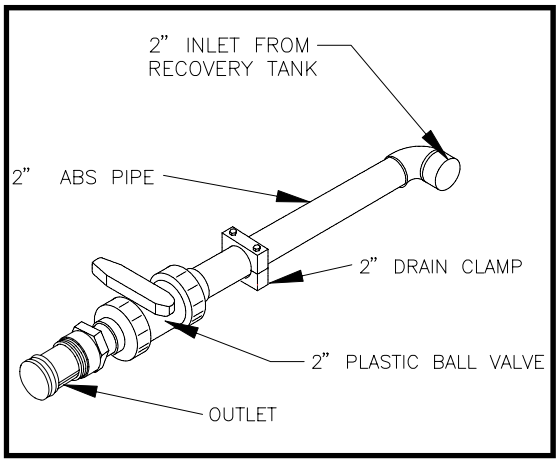

Figure 4-5: Drain Assembly

- **Check beneath the vehicle floor and if the drain pipe clamp position is correct, drill two (2) holes in the floor. Install the bolts with washers and tighten securely.**

- **Connect (2) brown wires from the recovery tank to the (2) black wires in the harness located at the right rear side of main machine.**

- **Connect hose to recovery tank from chemical prime valve.**

BLOWER EXHAUST INSTALLATION:

The blower and engine exhaust join internally and exit out the front of the machine. A 3'' hole can be placed in the floor for exhaust to blow out under the vehicle if desired. Use High Temperature Silicone to seal around the hole.

DANGER **This system produces carbon monoxide which is an odorless, but deadly gas. It is the operator's responsibility to assure that the exhaust is directed away from building entrances, etc. during operation.**

The manufacture also recommends the installation of roof vents in the vehicle to allow excessive heat to escape.

OVERFLOW INSTALLATION:

The pressure relief, water box and water tank (if equipped) overflow hoses combine internally and relieve through a fitting on the face panel. It is imperative that this open fitting NOT be plugged or damage will result. A relief cut is necessary at the end of the hose so ice cannot form a plug.

FUEL LINE HOOKUP:

*****Refer to installation instructions supplied with the fuel tap kit purchased**

NOTE: **The machine is equipped with a secondary fuel pump which pumps fuel into the engine at a pressure of 2-1/2 PSI maximum. Secondary fuel pumps are required for the White Magic Commander HO and should be mounted as near the vehicles fuel tank as possible. Fuel pumps are designed to push fuel more than suck fuel.**

WARNING ***Do not start vehicle, or use any electrical devices which could accidentally ignite gasoline while installing any of the connections into the fuel tank. Use an industrial knife to cut hoses.***

WARNING ***Never operate this machine with a portable gas container inside the vehicle. Doing so increases the risk of a fire or explosion.***

Vehicles are constantly changing fuel system requirements due to EPA, DOT and other agencies regulations. White Magic Inc. has hook-ups for many older vans. Please consult the factory for information and instruction on the newest or older applications.

Fuel Pump Installation

Install the fuel pump on or as close to floor as possible in a convenient location away from the exhaust system and any moving parts. Position fuel pump with input heading in the direction towards the vehicle fuel tank. Verify input and output as shown on fuel pump body. Connect the fuel line being installed to the input and output of the fuel pump. Tighten fuel lines onto fuel pump using stainless steel hose clamps.

A red wire is wired into the machine's electrical system to provide power for the fuel pump. The wire is located in the terminal block. The red wire is provided with a female connector. Connect this wire to the fuel pump's positive connection. Assure that the black fuel pump lead wire is properly grounded.

At this time the fuel pump installation and all hose connections should be complete. To test the fuel pump, turn on machine key and listen for the fuel pump to start clicking. After the pump builds up pressure and fills the carburetor and lines, it will stop clicking. When this happens, turn off key and proceed to the next step.

Chemical Jug Tray

Install the chemical jug tray onto the van floor at the left side of machine using two screws. It may be necessary to drill two small pilot holes in bottom of tray for easier mounting of TEK screws. Place the chemical jug into the tray.

Covers, Shields, Etc.

The Commander HO has pulley shields over the engine & pump belts, and heat shields to protect from the areas of hot engine exhaust.

DO NOT operate these machines without guards in place.

Water Requirements

White Magic recommends that you test the water you will be using in your machine for water hardness, primarily minerals. Calcium and magnesium deposits in a water supply will "scale" or build up during heating. Most, if not all, scaling occurs down stream of the heat exchanger and in the heat exchanger. If you will be filling your machine from an area of hard water, especially calcium and magnesium deposits, and use a water softener device, you must also follow the maintenance schedule to prevent scaling *(see Descaling)*. **A filter will not extract all deposits**. Contact your White Magic distributor for assistance in choosing the proper water softener for your area of operation.

Optional Equipment

1.) **Hose Reels**

- Vacuum Hose Reel: Position hose reel and bolt to floor of van, *(see Fig. 4-1)* for placement. Connect hose reel to inlet of vacuum on the recovery tank or the inlet of the optional filter box.

- Electric Vacuum Hose Reels only: Connect a 10 gauge wire from the positive terminal of the vehicle's battery to the power supply wire of the hose reel.

CAUTION Install a proper size or fusible link.

Attach the ground wire of the Electric Hose Reel to the frame of the vehicle when bolting down reel.

- Floor Mount Solution Hose Reel: Position hose reel and bolt to floor of van, *(see Fig. 4-1)*. Connect hose reel to one of the Output Wand disconnects on the face panel.

2.) **Filter Box**

- Position filter box in vehicle and bolt to floor, *(see Fig. 4-1)*. Connect inlet side to wand or hose reel and outlet side to vacuum inlet on recovery tank.

3.) **Automatic Pump Out—(see pg. 14 - 15)**

4.) **Water Tank**

- Positioned under main machine assembly, bolt to floor with supplied hardware. (4 Places) See Following Procedures for Signature Series **(PN#TA70)** Fresh Water Tank installation.

HIGH ALTITUDE OPERATION (Over 5,000 Feet): ***WARNING***

The new versions of ***KOHLER***® Engines used on the Commander HO machine are C.A.R.B. (California Air Resources Board) compliant. However, a significant loss of power is to be expected at higher altitude operation, because there is less oxygen available. High Altitude Jets are available and need to operate at high altitude. Major damage will occur if a high altitude jet kit is equipped and machine is operated at lower altitudes. Water will boil at a lower temperature and the system may need to be adjusted accordingly to prevent "**live steam**" at the end of the tool.

LOCAL WATER PRECAUTIONS:

The quality of water varies depending where you are in the country. Many areas have an excess of minerals in the water which results in what is referred to as hard water. These minerals tend to adhere to the insides of the heater coils and many other parts of the machines parts causing damage and loss of effective cleaning.

Hard water deposits that might occur within the water system of the machine can be a serious problem. The precision technology of the machines heat system is intolerant of any foreign material building up within the heat exchangers. Hard water deposits will decrease the performance of the system and reliability and VOID the warranty.

To maintain the warranty of a White Magic machine it is required that all machines operating in areas with 3.5 grains or more of hardness per gallon be fitted with a water softening system. De-scaling of the water system by using a de-scaling agent or acid-rinsing agent may not be enough in these areas.

White Magic does recommend that all machines be fitted with water softening systems for improved operation and performance.

NOTE:

White Magic does not endorse or prohibit use of "ionic" type softeners or conditioners (the ones that utilize strong magnets that the water flows over). However, if used they must be used in the by-pass loop of the pumping system and NOT the input side.

CAUTION Failure to take appropriate care to prevent scale build up can result in system failure and loss of warranty on the affected parts .

WATER SOFTENER:

The use of a water softener will increase cleaning efficiency and equipment life, chemical use decreased and the appearance of cleaned carpets enhanced when water softeners are incorporated with equipment use in hard water areas. The manufacture strongly urges the use of water softeners in areas where the hardness exceeds 3.5 grains per gallon. Failure to do so may invalidate the warranty of the equipment.

The low cost of a water softener service will increase the life of not only the machine but of all the tools that are used in cleaning. The water softener will also increase the cleaning and use of less chemical in the day to day operation of the cleaning plant.

Contact a water softener distributor in your area for information on the rental of a simple water treatment unit to carry in the truck. Be sure to change (or) recharge the water softener within manufacturers specifications.

Example: Softener will treat 900 Gallons of water. If 30 gallons per hour is used for 5 days this is 150 gallons per day; in 6 days this would be 900 gallons. This would mean the softener should be changed every 6 days.

WASTE WATER DISPOSAL:

There are laws in most areas of the country prohibiting the dumping of recovered water from carpet cleaning. This is called gray water.

The only place that this water can be dumped is into a sanitary treatment sewer. This cleaning rinse water recovered into your unit's vacuum recovery tank contains materials such as detergents. These must be processed before being safe for streams, rivers and reservoirs.

Important:

The penalties for noncompliance can be serious. Always check local laws and regulations to be sure you are in compliance. An acceptable method of waste disposal is to discharge into municipal sewage treatment system after first filtering out solid material such as carpet fiber such as using an inline filter box. Check your local codes for proper access to a sanitary system (i.e. a toilet, laundry drain, RV dump, etc.).

An easer method would be to use a White Magic Automatic Pump-Out- System (APO). This System is designed to pump the dirty water from the waste recovery tank to the sanitary system with out the tank filling up to force the cleaning to stop. This helps in the cleaning production.

This system can be installed with a new machines or machines that have been in operation for a while.

NOTE:

A pump out cannot be installed unless the system has a filter box.

Recovery Tank Pump Out System: (PO50 installation procedure)

- Completely empty the recovery tank of any wastewater if the pump out is to be installed on an existing machine. Otherwise lay the tank on it's back before installation to easier facilitate the necessary tank modifications.
- Park the vehicle on a flat surface, chock the wheels and remove the keys from the ignition.
- Remove the negative battery cable from the battery on the machine.
- Align the template on the recovery tank where the pump out float switch is to be installed.
- Center punch the holes onto the tank with a Ø.25" transfer punch. Lightly scour the area below the template with a piece of Scotch Brite or fine sand paper to help prevent any leaks. Drill "F" size and tap as noted on the template, 5/16-18 UNC in 6 places around the outside edge, drill Ø2.5" in the upper middle center punch, Drill Ø1.5" in the lower middle center punch.
- Bolt the float plate assembly to the tank with the six supplied 5/16-18 X 5/8" BHS. Assure that the float is over the output and is on the inside of the tank. Be sure to apply a good amount of Teflon tape to all male threads.
- Place the pump out assembly on the floor in an easily accessible location. The pump placement can be located anywhere desired but must be located on the floor and the hose between the tank and the pump **must not exceed 36"** in length. Be certain that there are no wires, cables or hoses in the way under the floor. Drill thru and bolt the pump out assy to floor. The hose must have a steady downward slope toward the pump with no humps or valleys.
- TEK screw the output floor mount valve assembly to the floor in the desired location. (The assembly must be screwed to floor before the barb can be installed)
- Cut and fit the black hose to the pump, tank, and valve. Tightly hose clamp all hose fittings.
- See following page for wiring schematic.

Pump Out Operation:

- Attach the supplied garden hose to the floor mount output and run it to the desired waste location.
- Open the output valve to the hose.
- Flip the switch on the facepanel to "AUTO" or "MANUAL" the pump will operate until the float switch level is reached and the pump will shut off.
- Always leave the output valve in the closed position when not in use or spillage may occur.
- Never run the pump with the output valve in the closed position.
- If the pump should come into an overloaded condition (closed valve, clog, or kinked hose) the circuit breaker will trip and need to be reset.
- Running the pump dry for short periods of time will not cause any damage to the pump.
- Be sure to pump the system completely dry and close the output valve if freezing conditions are likely to occur.

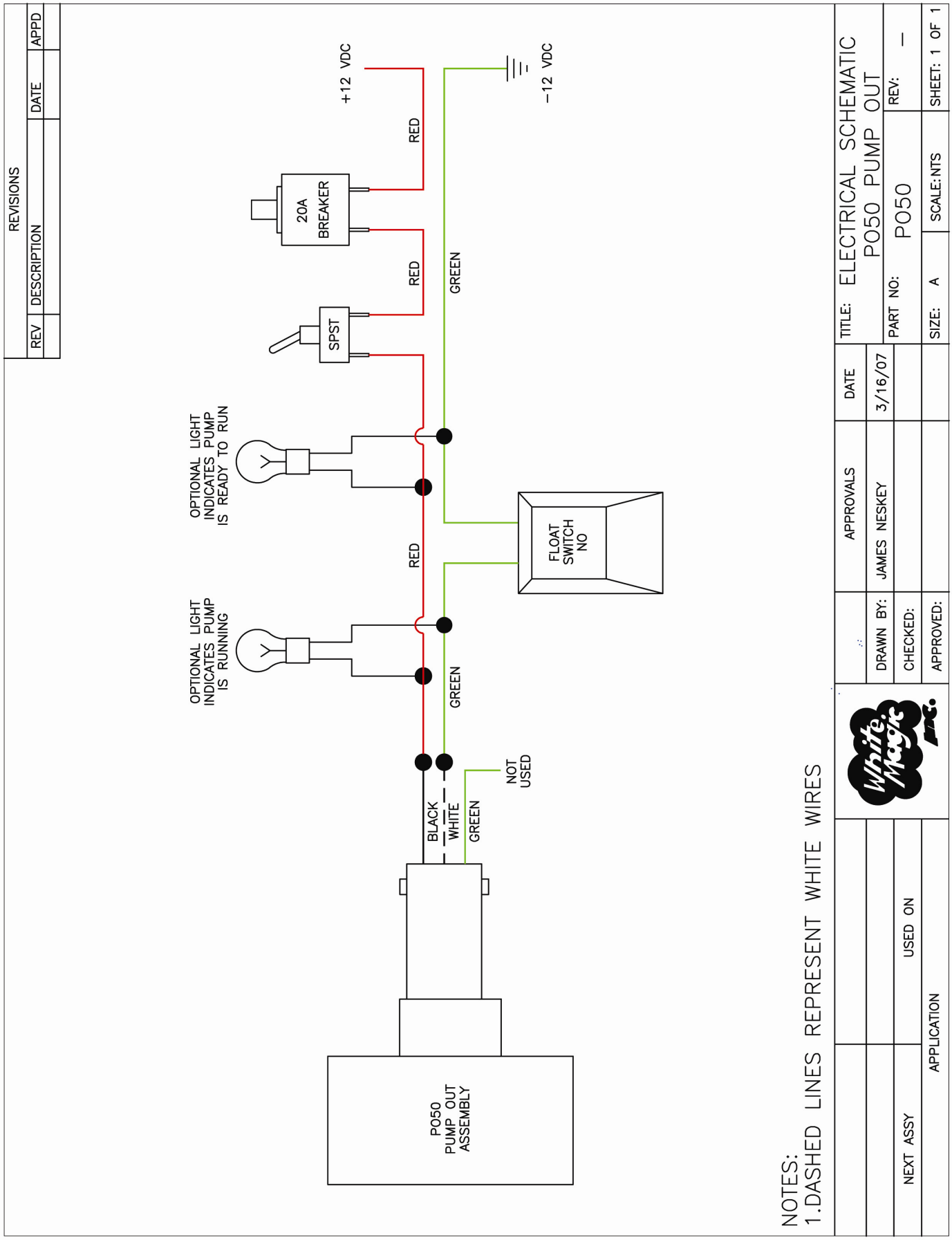
REVISIONS
REV
DESCRIPTION
DATE
APPD
+12 VDC
-12 VDC
RED
RED
GREEN
20A BREAKER
SPST
OPTIONAL LIGHT INDICATES PUMP IS READY TO RUN
OPTIONAL LIGHT INDICATES PUMP IS RUNNING
RED
GREEN
FLOAT SWITCH NO
NOT USED
BLACK
WHITE
GREEN
P050 PUMP OUT ASSEMBLY
NOTES:
1.DASHED LINES REPRESENT WHITE WIRES
APPROVALS
DATE
DRAWN BY:
JAMES NESKEY
3/16/07
CHECKED:
APPROVED:
TITLE: ELECTRICAL SCHEMATIC P050 PUMP OUT
PART NO: P050
REV: –
SIZE: A
SCALE: NTS
SHEET: 1 OF 1
NEXT ASSY
USED ON
APPLICATION

OPERATING PROCEDURE

WARNING ***NEVER*** *run your carpet cleaning machine with vehicle engine running!!!*

Start-Up Initial Procedure

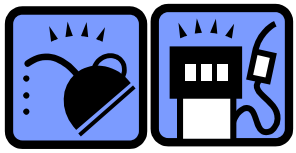

STEP 1: FLUID LEVELS

- Check engine coolant level.
- Check engine oil level.
- Check pump oil level through sight indicator.
- Check blower oil level through rear sight indicator.
- Check for evidence of grease oozing out of both relief fittings on blower.
- Check for enough fuel to complete the job.

STEP 2: CHEMICAL MIX

Mix chemical and fill chemical jug according to manufacturers recommendation. We recommend liquid chemical although a good quality powder is OK if properly mixed.

STEP 3: CLOSE THE FOLLOWING VALVES (see Fig. 5-1)

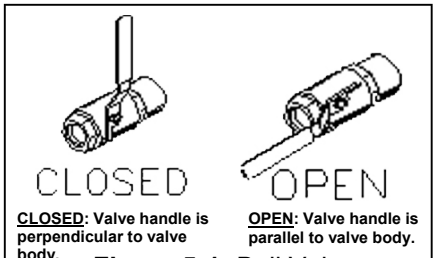

Figure 5-1: Ball Valve

- PVC Drain valve on right hand side of recovery tank.
- Drain valve on front of fresh water tank. (If Equipped)
- When operating Commander HO with optional water tank, the following steps must be taken:
  1. When using the water tank, have 1" valve on the right side of the water tank open.
  2. Have the handle of the valve directly below and in front the ***CAT PUMP®*** pointing down towards the water tank.
- If not using the optional water tank and you are running the machine with incoming water hooked up to the face panel, the following steps must be taken:
  1. Close 1" valve on right side of optional water tank.
  2. Close valve located directly below and in front of ***CAT PUMP®***.

STEP 4: OPEN THE FOLLOWING VALVES

- Rotate the face panel chemical adjust black knob fully counter clockwise *(See Fig. 5-2)*.
- Turn Unloader *(pressure adjust)* knob fully counter clockwise. Turn clockwise slowly until resistance is felt, *(contact is made with spring)* then turn clockwise another 1 1/2 turns max. This valve is located on the face panel.
- Open the pressure pump output marked "**AUX OUTPUT**" valve located on machine face panel.

- Turn chemical priming valve to **"PRIME" (assure system has vac load).** Air bubbles will flow from the clear chemical draw line and chemical flow meter toward the pulse pump. When the flow meter shows no air bubbles turn the flow meter indicator valve to the "**ON**" position. *(Adjust the chemical knob while spraying solution from the cleaning tool as necessary during operation)*.

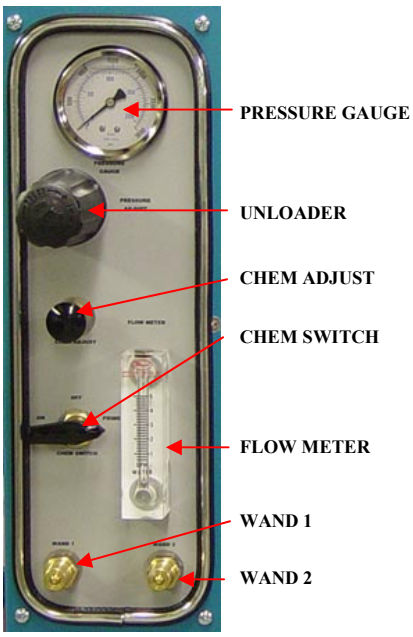

Figure 5-2: Pressure Panel

NOTE:

(HOW THE CHEMICAL SYSTEM WORKS...)

The chemical pump draws the chemical from the inlet filter which is in the chemical container. It flows through the flow meter indicating the GPH of chemical being used. The chemical then flows through the chemical pump to the chemical selector valve. The chemical valve can be used to prime the pump *(let air from the system)* inject chemical into the system or turn the chemical flow off. In the "ON" position, chemical flows through the metering valve, and is injected into the heated water path just prior to its leaving the machine. The desired chemical injection ratio may be obtained by an adjustment of the chemical flow meter during the spraying of water through the cleaning tool.

STEP 5: SET FACE PANEL SWITCHES

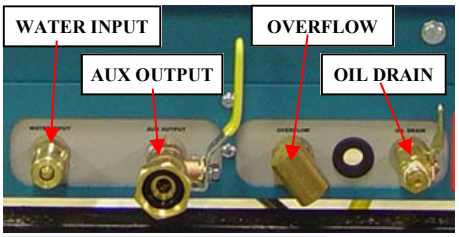

Figure 5-2a: Lower Face Panel

- Water Recovery switch to "**NORMAL"** position.
- Pump out system switch *(if equipped)* to its "**CENTER**" position.

STEP 6: HOSES AND QUICK CONNECTORS

- Connect solution hose to "**WAND 1"** or "**WAND 2"** and cleaning wand. Make sure solution hose shut-off valve is ***OPEN.***
- Connect garden hose to input water supply and to external water source. Turn on water. Water will automatically shut off when water box is full or when water tank is full. *(If so equipped)*
- Connect auxiliary hose to "**AUX OUTPUT**" valve on the lower face panel.
- Connect vacuum hose from recovery tank to cleaning wand . This may be through the optional filter box assembly and optional vacuum hose reel.

Assure that the garden hose connector is tight *(and that the o-ring is in place)* at the water input quick connect. This fitting can allow air into the pumping system, which **WILL** cause pump problems and potential failure.

STEP 7: START ENGINE AND PRIME CHEMICAL PUMP

NOTE: ***READ THIS ENTIRE STEP BEFORE PROCEDING.***

1. Make sure pressure pump output auxiliary valve on face panel is open and place open ended hose attached to valve in a bucket. This will allow water to free flow from machine when the engine starts.

2. Pull engine throttle control, located on right side of face panel, out slightly to increase engine speed as it starts.

3. Pull out choke control located on right side of face panel.

4. Turn engine key switch to "**RUN"** position. The face panel gauge lights will illuminate. The fuel pump *(typically)* located beneath the vehicle will click as the fuel pressure builds up.

5. Start engine by rotating key switch to start position and releasing back to run position as engine starts. Run engine for approximately 10 seconds and push choke in slowly until choke is fully in the off position. The water should start flowing from the hose which is attached to the auxiliary valve at this time. If water does not flow immediately, shut-off engine and review previous steps. If second attempt fails, consult service center.

Important: ***DO NOT*** run engine if water will not flow out auxiliary valve.
This will cause **EXTENSIVE DAMAGE** to pump.

6. With engine running, increase engine throttle to full engine speed. The machine cannot be run in the idle position for cleaning upholstery, carpet or floor extraction. This may VOID the warranty. Run the machine at half to full throttle. Water flow from auxiliary water hose will increase. When water flow maximizes from hose, slowly close auxiliary valve until pressure rises slightly. The chemical pulse pump should start to prime itself at this point. Air bubbles will flow from clear chemical draw line and chemical flow meter toward pulse pump. When the flow meter indicator reads full scale and there are **no bubbles in the chemical draw line** turn chemical prime valve to "**ON**" position and rotate chemical adjust knob clockwise until flow meter reads approximately 2 GPH. Close pressure pump output auxiliary valve located on face panel.

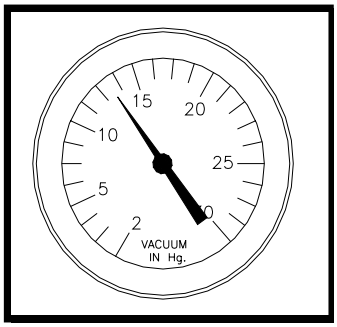

Figure 5-3: Vacuum Gauge

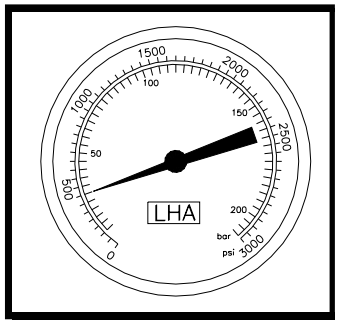

Figure 5-4: Water Pressure Gauge

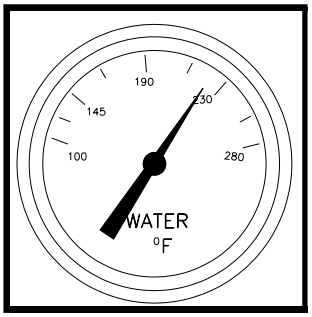

Figure 5-5: Temperature Gauge

STEP 8: MACHINE ADJUSTMENTS AND TESTS

1. With throttle set for maximum machine operating speed, seal the end of the vacuum hose and assure that the vacuum gauge reads between 13-14" Hg. and that air flow is adequate. The vacuum reading must not exceed 14" under any condition, blower and/or engine damage will result. *(See Fig. 5-3)*

2. Open shut off valve at end of solution hose and depress cleaning wand trigger. With water flowing from tool, adjust the machine's water pressure for 400-500 PSI *(See Fig. 5-4).* In order to achieve consistent adjustable temperatures, an operating pressure of 200-500 PSI must be maintained. The water pressure can be adjusted by rotating the pump pressure adjust knob clockwise to increase and counter clockwise to decrease pressure. The pump pressure adjustment knob is located directly beneath the pressure gauge on the face panel . The gauge reading should drop nearly to zero when no water is being pumped.

3. With water flowing from the cleaning wand, adjust the chemical adjust knob fully counter clockwise and assure that the chemical flow reading on the chemical flow meter reaches at least 4 GPH. Adjust the chemical adjust knob fully clockwise and assure that the chemical flow stops. Adjust flow rate as desired which is normally between 1-3 GPH.

4. With vacuum sealed and the cleaning wand not spraying, allow system to heat up until the green water bypass light on the face panel illuminates. Depressing wand trigger for a couple seconds at a time during this procedure will allow the temperature to rise more quickly. After a few seconds, the temperature will rise and then will decrease until the green light extinguishes. This light will go on and off indicating proper heat-divert system operation. Depending on incoming water temperature and other factors, the system may not stop diverting until you use some water from the wand. The system will not provide a high volume of hot water until all components are fully heated. Holding the valve open and watching the temperature gauge at this time is meaningless *(Refer to Fig. 5-5)*. Under long periods of no flow conditions, the diverter light may come on momentarily. This indicates that the machine has gone into divert mode to control the water temperature. This is normal and is a designed feature.

At this point, pre-operating tests have been performed and the machine is ready for operation. Shut down the machine in accordance with instructions.

MACHINE SHUTDOWN INSTRUCTIONS

- Flush clear water through the chemical system for 10-20 seconds.
- Turn **OFF** chemical flow.
- Lower the throttle to *MID-RANGE* and allow to run.
- Cool the machine by lowering the adjustable thermostat to "LOW" while spraying the cleaning tool into the vacuum hose for 3-5 minutes. The chemical will be flushed from the machine and cleaning tool at this time.

- Depress switch on face panel to water recovery.

- Remove the vacuum hose.

- Turn key to off position and depress face panel switch back to normal position. Machine is now ready for the next cleaning operation. Disconnect set up and proceed to approved waste dump site if necessary.

- At this time, the blower should be lubricated with a water displacement lubricant.

Important:

*(In accordance with the EPA, state and local laws, **DO NOT** dispose of waste water into gutters, storm drains, streams, reservoirs, etc. Use only approve sewage treatment systems).*

Winter Operation and Winterization

Extreme care must be taken to assure that the machine and its associated tools are protected from freeze damage. Freeze damage is expensive to repair and is **NOT** covered under the warranty. The van must be either garaged in a heated area or the equipment must be winterized if below freezing temperatures (32°F) or (0°C) are forecasted or expected. Winterization is the process of draining the water from the equipment and replacing it with antifreeze during periods of non-use or storage.

WHITE MAGIC, INC. WILL NEITHER PROVIDE WARRANTY COVERAGE NOR BE HELD RESPONSIBLE FOR DAMAGE CAUSED BY FREEZING.

NOTE:

- ***Undiluted windshield washing antifreeze is sufficient for temperatures down to 0°F (-6°C).***
- ***Ethylene glycol (engine antifreeze) or RV antifreeze must be used for lower temperatures.***
- ***Antifreeze must be flushed from the machine before any cleaning operation.***

The Winterization Process

- Follow normal shutdown procedure *(as previously mentioned).*

- Drain the recovery tank.

- Inject a water displacement lubricant into the blower lubrication cup.

- Remove the chemical line from the chemical jug and place it into a container with 2 gallons (8 liters) of antifreeze. Add additional antifreeze if necessary while winterizing system.

- Check that the chemical pulse pump prime valve is in the "**ON**" position.

- Start machine.

- Place a second empty 2 gallon container under the auxiliary output valve on the face panel and open that valve. Watch for antifreeze to flow from its container through the clear hose, to the flow meter and on to the pulse pump.

- Increase the chemical flow to 2 GPH using the Chemical Adjust Knob *(refer to Fig. 5-2)*.

- Allow antifreeze to flow through the clean draw line to the flow meter, then to the pulse pump. Once the antifreeze is observed entering pulse pump, allow the antifreeze to flow for approximately 10 seconds then fully close the chemical adjust knob on the face panel. Turn the chemical prime valve to "**PRIME**" for 2-3 seconds and then to off.

- Shut off the machine.

- Drain fresh water tank *(if equipped)*. Do not close the auxiliary output valve or remove the second container.

- Disconnect input water hose from the face panel

- Run the machine in water tank mode until water is cleared in the hoses to the tank. Shut the 1" valve on the water tank and switch the valve on the input of the pump to waterbox operation. Pour 1-2 gallons of anti-freeze into the waterbox. If no water tank, simply run water box empty, fill with antifreeze.

CAUTION

The water box capacity is approximately 2–1/2 gallons. Winterizing 150' or more of solution hose may require you to add additional antifreeze to the water box during the Winterization process.

Figure 5-6: Temp. Control Valve

- Connect cleaning tool to solution hose.

- Restart engine.

- Pull trigger on cleaning tool until antifreeze is observed coming from tool. *(Winterize all cleaning tools at this time).*

- Once antifreeze is observed coming from tool, release trigger.

- "**OPEN**" auxiliary output valve until antifreeze is observed flowing.

- Close valve and flip "**OPEN**" the temperature control valve on the unloader behind the face panel momentarily. Flip valve handle back to "**CLOSED**" position and turn off machine.

- Process is complete.

NOTE:

- Always winterize the machine through "**WAND 1**" and/or "**WAND 2**".
- Antifreeze through the auxiliary output does **NOT** winterize the heat exchangers.
- *(Be sure that the temperature control valve is "**CLOSED**").*

REMEMBER:
Before resuming cleaning operation, connect a clean water supply and start machine. ***CLEAR*** *antifreeze from the lines and tools.*

NOTE:

******If your machine is equipped with an external pumpout system, connect hose to pumpout output valve and turn on pump until all water has been pumped out. This takes only seconds. Turn pumpout pump off once water has stopped flowing from the output hose.***

Water Extraction Operation:

DANGER

NEVER recover flammable liquid or chemicals during any phase of water recovery.

NOTE: ***It is highly recommended to have the optional recovery filter box for this operation.***

- Start engine with throttle position at "**IDLE**".

- Allow engine to warm up for 2-3 minutes.

- Connect vacuum hose to the recovery tank or filter box.

- Connect extraction tool.

- Set throttle to "**HIGH**".

Figure 5-7: Filter Box

- Be sure water box is full of water. Flip switch to "**WATER RECOVERY**."

- Turn pumpout switch to "**ON**". *(if applicable)*

- Turn chemical prime valve to "**OFF**". *(see Fig. 5-2)*.
- Begin extraction using the vacuum hose.

Upholstery Cleaning Operation:

White Magic recommends the use of Upholstery Tools designed for truck-mount pressure having an automatic high pressure solution bleed-off.

- Start engine with throttle in "IDLE"
- Allow the machine to warm up for 2-3 minutes.
- Connect hoses.
- Connect the upholstery tool.
- Adjust the throttle to "**HIGH**".
- Turn cleaning switch to "**NORMAL**".
- Set temperature to desired level.
- Turn pumpout switch to "**ON**". *(if applicable)*
- Set cleaning pressure to desired level.
- Prime/Set chemical if needed.
- Start cleaning.

NOTE:

Remember:

- *Clean only items recommended for wet cleaning.*
- *Take all necessary precautions recommended by upholstery manufacturer to ensure satisfactory cleaning results.*
- *Use a chemical recommended especially for upholstery cleaning.*
- *Clean only items recommended for wet cleaning.*

Take all necessary precautions recommended by upholstery manufacturer to ensure satisfactory cleaning results.

CLEANING AND CHEMICALS:

Your mobile carpet cleaning unit has been engineered using the latest and most up to date technology available today. Even with this in mind, it remains only a tool of the carpet cleaning trade and can produce only as good a job as the person operating it.

There are no shortcuts to good carpet or upholstery cleaning. It requires time, knowledge and proper use of cleaning products.

White Magic recommends the use of spotting agents and taffic lane cleaners, as required, prior to the actual cleaning of carpet or upholstery.

The use of some chemicals through your machine can seriously damage the internal plumbing, high pressure pump and heater. These harmful chemicals include concentrated acid solvents, some paint, oil, and grease removers with a high concentration of solvents.

White Magic recommends only the use of chemicals containing rust and corrosion inhibitors and water softening agents to prevent chemical buildup. This may lead to component failure and warranty invalidation.

The increase demand for acid rinsing results in the need for special care while using these acid based chemicals in your equipment. The negative side of these products is the corrosive effects they have on the metals, pumps, heat exchangers and fittings in the equipment.

When and if you have the need to use such a product, you must neutralize your equipment immediately after its use.

CHEMICAL MIXING:

Mix chemical and fill the chemical jug by referring to the table below. Insert chemical draw tube into the chemical jug and screw on the cap.

pH CHART

1	2	3	4	5	6	7	8	9	10	11	12	13	14
ACID						**NEUTRAL**				**ALKALINE**			

To neutralize an acid:

- Use an alkaline to bring the pH up to neutral.
- Use an acid to bring the pH down to neutral.
- By using pH paper and this chart above this can be accomplished.

When cleaning a carpet always move the cleaning tool in smooth forward and backward strokes. Apply slight pressure to the forward stroke while the solution is applied to the carpet. If you make (2) two wet strokes and finish with (1) one dry stroke you will find that the carpets will clean with ease and the heat of the machine will be maximized.

OVER WETTING:

There are several reasons for over wetting a carpet.

- Too few vacuum strokes or improper vacuum stroke technique.
- Obstructed, cut or kinked hoses.
- Vacuum tank drain valve left partially open.
- Vacuum tank drain valve bad.
- Clogged vacuum blower filter bag or filter screen.
- Vacuum tank clean out lid not sealing properly.
- Cleaning carpet with to much foam (excess soap) left from a previous cleaning.

MACHINE MAINTENANCE

To avoid costly repairs and down time, it is important to develop and practice good maintenance procedures from the beginning. These procedures fall into daily, weekly, monthly and quarterly service and are outlined below. All recommended maintenance should be performed by competent service personnel.

Always record the date and machine hours when service is done.

Important: **OVERALL MACHINE MAINTENANCE**:

Maintaining the original appearance of your machine is important for two reasons:

1. It represents a big dollar investment for your cleaning business and its appearance should reflect that fact. A dirty machine is not professional.
2. Maintenance, troubleshooting, and repair is much easier to accomplish on a clean, well maintained machine. Regular cleaning of the machine offers you an opportunity to visually inspect all facets of the machine and spot potential problems before they occur.

OPERATIONAL MAINTENANCE:

NOTE:

- *A new machine must be serviced after the first 50 hours.*
- *All the following maintenance points should be checked/performed at this service.*

DAILY:

- Check engine coolant level.
- Check engine oil level.
- Check high pressure pump oil. *(Add as necessary)*
- Check blower oil level.
- Visually inspect machine for loose wires, oil leaks, water leaks, etc.
- Check that system pressure drops to zero when wand trigger is released.
  (If not see pump system troubleshooting)
- Lubricate blower with a water displacement lubricant through blower inlet.
- Wipe machine down with a damp cloth.
- Empty recovery tank out thoroughly.
- Inspect and clean vacuum slot on cleaning wand.
- Clean wand to maintain original appearance.
- Wipe down Vacuum and solution hose.
- Clean in filter box if so equipped.
- Remove the check ball screen, clean and/or replace if necessary.
- Check the spray pattern of the wand.
- Check that vacuum is 14” max *(fully sealed)* and engine rpm are 3200 - 3300 max.
- When machine is running under vacuum load and machine is cool, check that the exhaust diverters function back and forth when the water recovery switch is activated *(pump should also turn ON & OFF).*

WEEKLY: *(25 hours)*

- Do all daily checks.
- Inspect vacuum tank s/s filter and in-line filter bag for tears, holes, etc. *(Clean, repair or replace as needed)*.
- Check all fasteners, clamps, etc. for tightness. Tighten as needed.
- Check pump and blower belts for tension, wear, etc. and pulleys for alignment.
- Check high pressure water lines for wear.
- Inspect vacuum relief valve. Clean and lubricate. Be sure spring actuates smoothly by hand.
- Check all wiring
- Flush water chemical system with 50/50 white vinegar solution.

MONTHLY: *(100 hours)*

- Perform all daily & weekly checks
- *(See Kohler Engine recommendations)*
- Change oil filter *(Every other oil change).*
- Check engine air cleaner filter. *(Clean or replace)*
- Check pressure adjustment valve. *(Grease as necessary/replace)*
- Check water level in battery. *(Clean battery connections as needed)*
- Change engine oil.
-

QUARTERLY: *(250 hours)*

- Check fuel lines.
- Clean and gap spark plugs.
- Check drive belts for cracks or wear. *(Replace as necessary)*
- Change blower oil.
- Change pump oil.
- Grease blower bearing fittings.

WARNING The engine oil should be changed after the first day of operation. When changing or checking the engine oil ***NEVER*** exceed the full line on the dipstick. When checking the oil on a new machine it is very difficult to see the amount of oil on the dipstick because it is colorless. You must take the dipstick out and wipe it off, then re-insert it to get an accurate level of oil. This will still be difficult to see, but if it is held at an angle to the light you should be able to accurately read the oil level line.

The maintenance interval that the machine should be de-scaled is based upon the condition of the water being used in the machine. If the water is 3.5 grams or more in hardness the machine should be de-scaled every week.

THE FOLLOWING IS A GENERAL MAINTENANCE TABLE THAT SHOULD BE FOLLOWED.

OPERATION	DAILY	25 HRS OR WEEKLY	100 HRS OR MONTHLY	200 HRS OR 3 MONTHS	500 HRS OR 6 MONTHS
Check engine oil	**X**				
Change engine oil and Filter				**X**	
Check engine spark plugs				**X**	
Check Coolant level	X				
Check blower oil		**X**			
Lubricate blower	**X**				
Check belt tension				**X**	
Change blower oil					**X**
Check pump oil	**X**				
Change pump oil				**X**	
Clean recovery filter			**X**		
Check diverter operation			**X**		
Inspect/clean waste tank float			**X**		
Battery (clean and add water)			**X**		
Grease hose reels			**X**		
Lube electric hose reel chains			**X**		
Waste drain valve cleaning				**X**	
De-scale machine					
Check vacuum reading	**X**				
Recharge Pulsation Dampener					**X**
Check filter box gaskets(proper seal)			**X**		
Check water tank filter				**X**	
Check waterbox filter				**X**	
Check anode & tank for deposits					**X**
Check pump pressure goes to Ø	**X**				

<u>ENGINE</u>: *(See Kohler Engine owner's manual - Section 12)*

The Commander is equipped with a 24 HP Aegis liquid cooled 2-cylinder engine. The Commander HO is equipped with a 28 HP Aegis liquid cooled 2-cylinder engine. The maximum speed is factory preset at 3200 RPM with a vacuum load of 13-14'' Hg. Do not to increase this setting. *Doing so will VOID the warranty.* The engine is set to properly operate both the blower and the pump. Excessive engine speed may result in premature failure to the engine, blower, pump or any rotating part.

(See Section 12)

Frequency	Maintenance Required
Daily or Before Starting Engine	• Check oil level, add as necessary. • Check coolant level.
Every 200 Hrs	• Check spark plug condition and gap, change if necessary. • Change oil and oil filter. (**Never** exceed the FULL mark on dipstick)
Every 500 Hrs	• Change spark plugs.
Every 1000 Hrs / 2 Yr	• Change coolant.

Oil and Spark Plug:

The spark plug gap should be adjusted to (0.030in for the 27 Hp.)

Spark plug tightening torque should be 24.4 – 29.8N.m(18-22 ft. lb.)

BLOWER: *(See **ROOTS**™ Blower owner's manual - Section 12)*

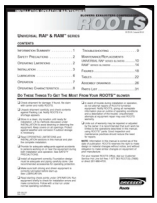

(See Section 12)

The Commander HO is equipped with a ***ROOTS***™ 47 positive displacement Blower. These rotary lobe blowers employ two double-lobe impellers mounted on parallel shafts and rotating in opposite directions.

- Oil level should be between the lines on oil sight gauge when machine is on a level surface.
- Use premium grade 50 weight, non-detergent oil with rust, oxidation and foam inhibitors. *(ex. MOBILE DTE BB, TEXACO R&O 220, or AMOCO 220)*
- Use a NLGI #2 premium grade, petroleum base grease with high temperature (300 degree service temperature), moisture resistance and good mechanical stability such as Shell Darina Grease NLGI grade 2 or equal. **DO NOT use lithium base grease.**
- Consult the Blower Owner's Manual for proper grease application.
- A blower oiling cup has been provided to oil the impellers during periods of non-use.
- After a long shutdown, consult the Blower Owner's Manual for proper grease replacement.
- Please consult the Blower Owner's Manual for all other maintenance and specifications.

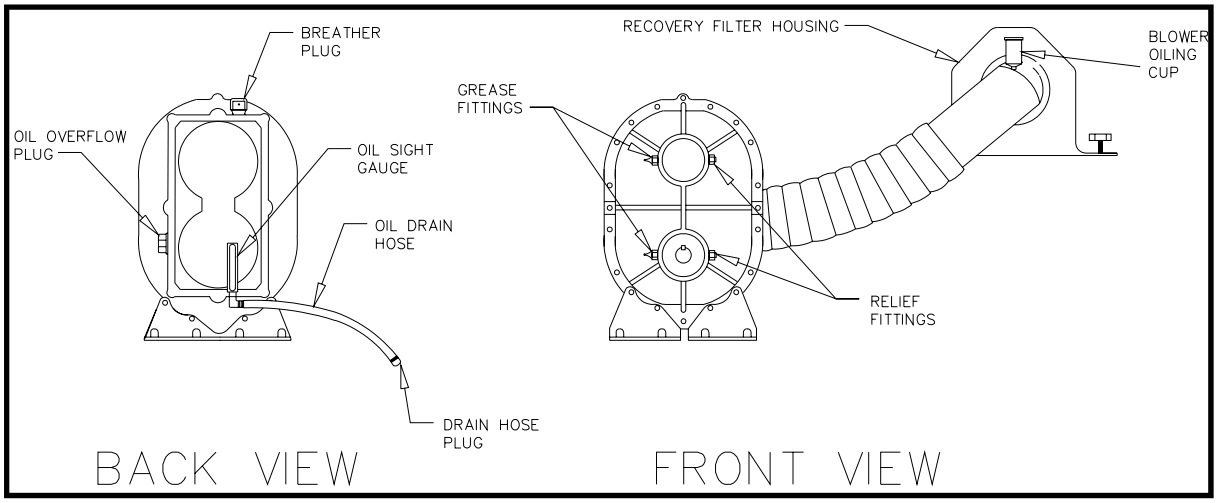

Figure 7-1 : Blower Configuration

Frequency	Maintenance Required
Daily	Check oil, Lubricate with water displacement lubricant.
Weekly	Lubricate Blower.
Every 3 Months	Check belt tension.
Yearly	Change oil.

PUMP: *(See **CAT PUMP®** owner's manual - Section 12)*

(See Section 12)

The Commander HO is equipped with a ***CAT PUMP®*** Model 5CP Pump. This pump is a triple plunger pump. The oil level should be checked every day and belt tension should be checked every 3 months.

- Use Cat Pump Oil (or) ISO 68 multi-viscosity petroleum based non-detergent hydraulic oil.
- Oil capacity is approximately 19 oz. for the Commander HO series.
- Oil level should be half way between the dot and top of oil gauge window when vehicle is parked on a level surface.
- Note that the Oil level is increased slightly higher in sight level due to direction of rotation.
- Please consult the ***CAT PUMP®*** Owner's Manual for all other maintenance and specifications.

FILTERS:

Filters in the recovery system are as important as the units engine, blower and heating system. They are there for a reason and that is to keep particles from going into the vacuum blower and to keep the recovery tank clean. Change the filter if it is damaged or has a tear in it. The housing unit should be thoroughly cleaned of all foreign material that forms.

- Check all Filters at the end of every day.
- Open the recovery filter housing by unscrewing the six (6) knobs and lifting the housing with the hose still attached.
- Unscrew the inner filter element counterclockwise until it can be removed. The filter element is made of stainless steel and plastic.
- Rinse the filter element with warm water. Apply high pressure water and or use a fine steel brush if necessary.
- Let filter dry or blow off with air before replacing.

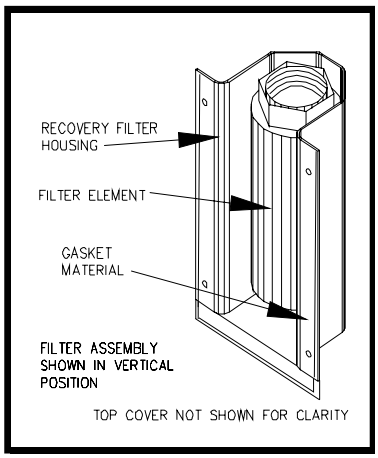

Figure 7-2 : Recovery Filter Assy.

PLUMBING:

Visually inspect the plumbing monthly. Check the piping, plastic strainer, fittings for leaks, hard water deposits, bends for cracks etc. Immediately change any defective or damage parts.

Garden hose washer w/ Filter Screen:

Visually inspect the plumbing monthly. Check the piping, plastic strainer, fittings for leaks, hard water deposits, bends, cracks, etc. Immediately change any defective or damaged parts.

Inlet Line Strainer:

Clean the Line Strainer **monthly** or as needed. The strainer is located at inside the waterbox.

- Shut machine off and allow to cool.
- Open wand valve for several seconds to relieve pressure.
- Remove cover on the waterbox and inspect the filter. *(Clean or replace as necessary)*
- Check anode when cover of water tank is off and also inspect tank for mineral deposits accumulating in bottom.

WASTE RECOVERY TANK:

The waste tank has an automatic float switch located inside the tank and below the recovery filter. This switch shuts the machine off when the recovery tank is full. The push button Engine Kill Override switch on the panel overrides this automatic float switch. Inspect and clean the float every month.

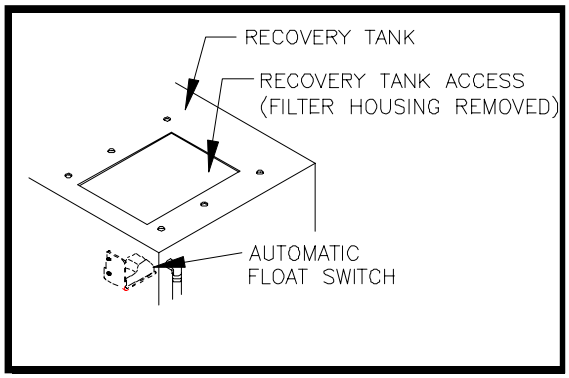

Figure 7-3: Float Switch Location

Important:

The switch works when dirty water fills up the recovery tank and moves the switch upward. This shuts the machine down so overflow does not occur.

NOTE:

(Foam will not activate the switch. When cleaning carpets that have an excess of soap in them a defoamer is needed).

- Drain the waste tank.
- Remove the filter housing.
- Reach inside the tank and manually check that the float moves up and down freely. There is a manual lever on the side of the switch.
- To remove switch, unscrew bracket and remove both bracket and attached switch from inside of tank. *(Caution: be sure you mark the orientation of the bracket)*
- Once outside, unscrew the switch from the bracket and clean. After cleaned, reverse this procedure to install the switch.
- Turn the machine on and manually raise the switch up and verify that the machine shuts off.

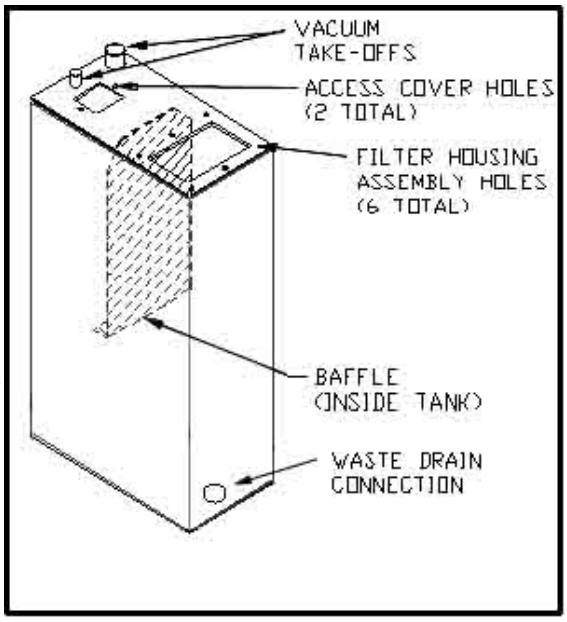

Figure 7-4 : Recovery tank Connections

NOTE:

Switch may waterlog. Manual activation does not mean that switch floats.

BATTERY:

The battery *(a heavy duty 42-60 amp hour garden tractor battery that has been slow charged)* is located to the left of the machine in front of the recovery tank.

- Check and add water monthly if needed.
- Check the battery cables terminals, clean and put a little grease on them if needed.

NOTE:

The machine will keep a fully charged battery up, but may not charge a completely dead battery. If this happens you will have to remove the battery from the machine put in onto a battery charger or replace the battery.

Hose Reels:

Electric Hose Reels: *(See Fig. 7-5)*

- Lubricate chain every 3 months.
- Adjust chain tension by loosening the four motor mounting bolts located on the motor mounting bracket. Slide motor to slacken or tighten chain.
- **Fuse** is located in the electrical box.

Oil the bearing that supports the axle on the opposite side of the assembly from the motor every 3 months.

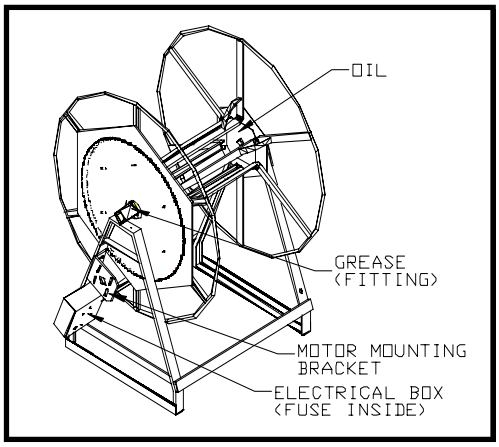

Figure 7-5 : Electric Hose Reel

Manual Hose Reels: *(See Fig. 7-6)*

- Grease axle swivel every 3 months.
- The drag brake assembly is designed to prevent the wheel from free spinning. Tighten the drag brake bolts occasionally as needed.

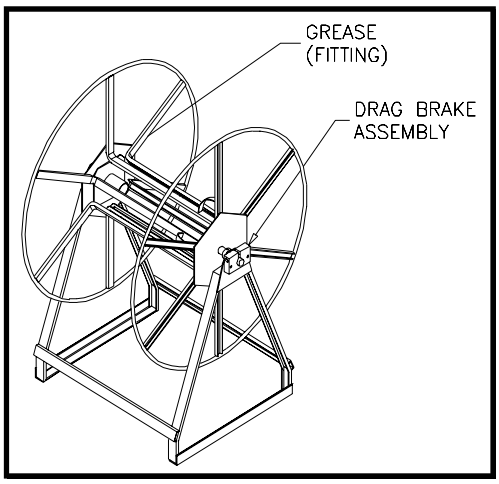

Figure 7-6 : Manual Hose Reel

Machine Body:

The machine body is made of aluminum. The exterior is painted to prevent oxidation. The front tank or tank below the machine is the fresh water tank. The rear tank is the recovery/waste tank.

- Drain the recovery/waste tank daily.
- Periodically remove the (-) negative battery cable from the battery and clean the exterior of the machine. Replace the cable when finished.
- Inspect the whole body occasionally for any leaks, deterioration, loose hardware, etc.

Holes may leak water if bolts are loosened.

- When replacing a bolt to the water tank Teflon tape to the bolts.
- **DO NOT** use silicone sealants on water tanks or water boxes.
- **DO NOT** over tighten these bolts. *(may result in stripping the aluminum threads)*

WASTE DRAIN VALVE:

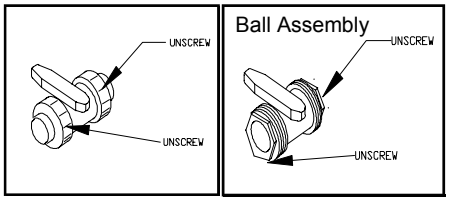

Figure 7-7 : Waste Drain Valve

- Clean and check drain valve every 3 months.
- Unscrew the collars at each side of valve body.
- Remove valve assembly.
- Clean the inside of the valve thoroughly with soap and water. *(The ball does not have to be removed)*
- Reassemble the valve and reattach to machine.

HEAT EXCHANGERS:

There is no specific maintenance required for the heat exchangers except the proper winterization and operation of the unit. If the heat exchanger body leaks the shell must be welded. If the coils are leaking or clogged the heat exchanger must be replaced.

PULSE PUMP: *(chemical pump)*

The stainless steel pulse pump, requires no normal maintenance.

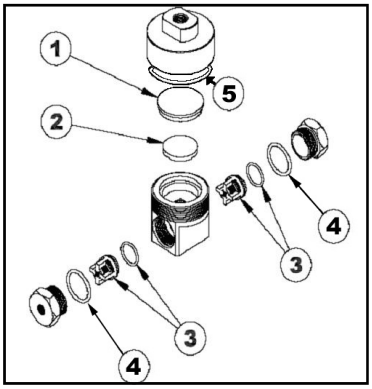

Figure 7-8 : Pulse Pump

CAUTION *Never run the chemical system dry or unprimed. Running it in this manner WILL damage the internal components of the pulse pump system.*

- A torn or damaged diaphragm is one cause of pump failure.
- Check valves on the input and output side of the pulse pump need to be cleaned periodically or when ever the pulse pump is serviced. Be sure when reinstalling check valves to orientate the flow in the proper direction.
- Rinsing the pulse pump with water and vinegar every other week will help the pulse pump to be trouble free.

CHEMICAL SYSTEM:

The chemical lines may need to be flushed with vinegar periodically to prevent abnormal chemical build-up. This flushing may be done by removing the clear plastic hose from the chemical jug and inserting it into a container of vinegar and water 50/50 mix. This should be done with the chemical meter set at its highest setting. Simply spray water from the wand, upholstery tool or such until you have exhausted at least one quart of vinegar and water. Then repeat the process with one quart of clear water to void all the lines of vinegar.

Liquids are recommended, but powders may be Ok when properly mixed. Unmixed powders may tend to build up and clog the system. Always use good quality chemicals when operating White Magic equipment.

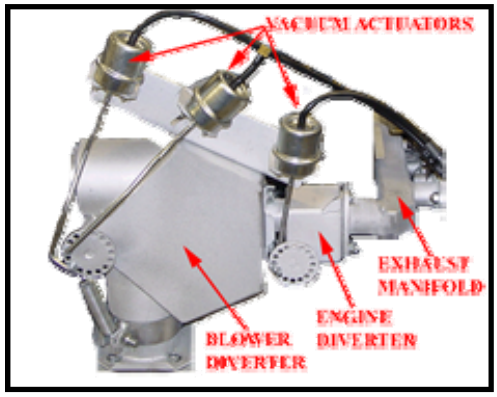

Figure 7-9 : Heat Diverter Assy. - Exploded View

HEAT DIVERTER:

The heat diverter needs no scheduled maintenance. If the heat diverter should stick open, check/adjust the vacuum actuator bracket. Check that actuator has sufficient vacuum when water recovery switch is activated with the machine cold. A stuck heat diverter will cause high, low or erratic water temperature and must be repaired immediately.

WANDS:

The wand and all of the cleaning tools should be periodically cleaned and checked. Taking dirty tools into the job is not the proper thing to do.

- Check and clean the jets.
- Check the inline filter screen.
- Clean the wand with a good stainless steel cleaner.
- Check valve for dripping (rebuild if necessary). Dripping may be valve or check ball screen.
- Check for good spray pattern, properly pointed behind back plate of wand.

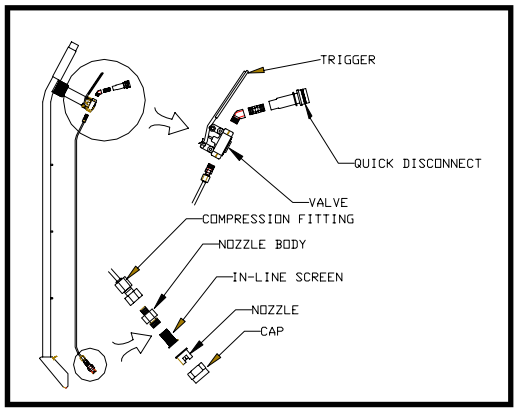

Figure 7-10 : Wand Assembly

ACCESSORIES:

When taking care of your carpet cleaning equipment you should never forget to take care of accessories.

HOSES:

- Clean and check vacuum hose for air leaks.
- Clean and check disconnects for water leaks (solution hose).
- Hoses should be checked regularly for leakage, tears, fatigue, cracks, etc.

NOTE:

SPECIAL NOTE: You are in the cleaning business. When you go to a customers home or business to do cleaning for them you need to look the part. You and your truck, equipment and tools are a reflection of your business and how much you care. By spending a few minutes every day you will be able to keep your cleaning plant in tip top shape, the equipment will last longer and you will automatically increase your business.

TROUBLESHOOTING GUIDE

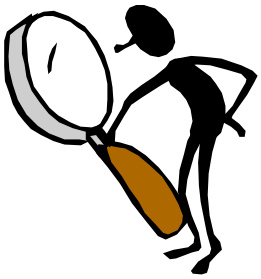

This guide provides specific instructions to aid in troubleshooting most of the possible problems during the use of this cleaning system. This guide has been provided to help reduce your down time. If the problem continues contact your local White Magic Distributor who you purchased your cleaning equipment from.

KOHLER®
800-456-5691

ENGINE TROUBLESHOOTING:

PROBLEM:

The engine will not turn over:

There is a problem with the fuse.

⇒ Check the fuse located on the right side of the engine.

The battery cable is loose or the terminals are corroded.

⇒ Clean and check the battery terminals connections.

The battery is dead.

⇒ Recharge or replace the battery.

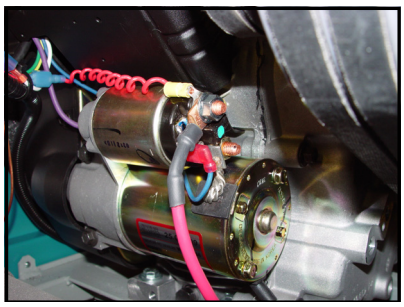

Figure 8-1 : Starter Solenoid

There is a problem with the starter solenoid.

⇒ With the ignition switch in the "Start'' position, check for 12 volts.
- Small wire from the ignition switch to the starter solenoid (blue).
- The large terminal with the cable from the battery.
- The large terminal with the Cable going to the starter.

⇒ The voltage is present on the first two checkpoints, but not on the large ter minal going to the starter *(Replace the solenoid)*.

The *CAT PUMP®* (or) *ROOTS™* blower is tight or seized.

⇒ Check that the pump and blower are not seized or frozen *(with the engine ignition turned off)*.

⇒ The *ROOTS™* blower should rotate freely by hand when the belts are removed. *(Refer to Blower Troubleshooting)*

The starter motor is defective.

CAUTION

⇒ Remove ignition key.
⇒ Remove the belts from the engine.
⇒ Check to see if the engine will turn over manually. Be sure spark plug wires are removed.
⇒ Check that the engine is grounded to the minus side of the battery.
⇒ With the ignition key in the Start position, check the starter motor for +12 volts.
⇒ If all of the above conditions are met and the starter will not turn, *(Replace)*.

The ground cable underneath the Motor has fallen or broken off.
⇒ Reattach the cable.

Figure 8-2 : Engine Kill Override

PROBLEM:

The starter turns the engine over, but the engine will not start:

The machine is shut down due to engine kill.
⇒ Try to run with engine kill override switch pushed in.

Engine turns over but will not start.
⇒ Engine oil is low. *(Add if necessary) (See Kohler Engine Manual)*
⇒ Engine oil switch is defective, or oil pump is failed or weak.
⇒ Engine is overheated - allow to cool.

Recovery tank is full.
⇒ Empty the recovery tank.

Recovery tank float is causing the engine to shut down.
⇒ Disconnect the float. If the unit Starts, replace the defective float.

NOTE: *A switch may function when lifted manually, but may not float.*

Machine has overheated.
⇒ Allow to cool down by running engine at half throttle with override button in and water flowing cleaning tool.

CAUTION

"Caution Hot Water Causes Severe Burns"
⇒ With engine at half throttle press trigger of cleaning tool to relieve system pressure and cool the machine down.
⇒ The engine will not run with out the override button pushed in until the unit has cooled down below the kill thermostat setting.

Oil pressure switch is malfunctioning or engine has low oil pressure.
⇒ Check the engine oil level. If it is at the proper level, then disconnect the oil pressure switch.

⇒ If the engine starts, check oil pressure to ***KOHLER***® specs, if OK, then replace the switch.

CAUTION

Do not run engine with the switch bypassed. The engine may have low or no oil pressure even when properly filled with oil.

Engine turns over but will not start.

⇒ *Check for spark at the spark Plugs.

⇒ If there is no spark, push in kill override and recheck.

WARNING

Explosive Fuel can cause fires and severe burns.

Fuel pump is defective.

⇒ Remove the fuel line from the engine and place it in a container to see if the fuel is being pumped when the ignition is on.

⇒ Replace the fuel pump if it is defective.

Fuel pump has no power.

⇒ Check for 12 volts at the fuel pump.

Poor battery ground to the fuel pump.

⇒ Repair the loose ground connection.

Fuel pump is sucking air between the fuel source and the inlet side of the fuel pump.

⇒ Examine the gas inlet side of the fuel pump.

⇒ Tighten any loose fittings or clamps.

⇒ Replace any ruptured hoses.

Fuel filter is clogged.

⇒ Inspect the filter. Replace it if necessary.

PROBLEM:

The engine runs poorly or dies after running for a while:

Air or gas filter is clogged

⇒ Inspect both filters.

⇒ Replace the clogged one.

Poor battery ground to the fuel pump.

⇒ Inspect the electrical grounds.

⇒ Repair any loose ground connections.

The engine and machine can be completely separated by changing wiring as shown. DO NOT run machine for more than 2-3 minutes.

(SEE ENGINE BYPASS PROCEDURE PG.20)

Fuel pump is sucking air between the gas tank and the fuel pump.

- ⇒ Examine the pump's gas inlet side.
- ⇒ Tighten any loose fittings or clamps.
- ⇒ Replace hoses.

Fuel pump is defective.

- ⇒ Remove the fuel line from the engine and place it in a container to see if fuel is being pumped when the ignition is turned on.
- ⇒ Replace the fuel pump if it is Defective.

Excessive engine load.

- ⇒ Clean and adjust the recovery tank relief value.
- ⇒ Adjust for 14 inches of lift under full load.

Poor ventilation causing engine to overheat. (Engine overheats)

- ⇒ Remove any air restriction from the engine.
- ⇒ Add a roof vent or external fan, if necessary.
- ⇒ Never run your equipment with the van doors closed.

Carbon build up in the combustion chamber. (Engine overheats)

- ⇒ Refer to a local *KOHLER*® engine dealer.

Too much oil in the crankcase. (Engine overheats)

- ⇒ Check the oil level and correct.

The engine is malfunctioning.

- ⇒ Refer to the engine operation maintenance manual or see local *KOHLER*® dealer.

A PCV valve is defective.

- ⇒ Remove and check the air cleaner for oil saturation.
- ⇒ If it is saturated, replace the PCV valve and air filter.

VACUUM SYSTEM TROUBLESHOOTING

The vacuum generator in this machine is commonly referred to as a positive displacement lobe type blower. The performance and life of this system is greatly dependent on the care and proper maintenance it receives.

CAUTION

Figure 8-2 : Blower Lube Port

Because of the close clearance between the lobes and the housing of the vacuum blower, solid objects entering the inlet will damage the internal lobes, gears, bearings or drive system.

To prevent this, a stainless steel filter screen has been placed at the vacuum inlet inside the recovery tank. This filter should be removed for cleaning weekly.

Do not run machine unless *ROOTS*™ blower inlet and SS inlet screen are intact and in place.

Foam passing through the blower could lead to serious problems. It is important to keep the vacuum tank free from foam (use an anti-foaming agent).

To protect the vacuum blower from overloading and damaging itself, there is a vacuum relief system installed on the vacuum tank near the stainless steel filter. When the vacuum tank inlet is completely sealed off, a maximum of 14" Hg. will be attained with the engine at a maximum RPM.

At the end of each day, a water displacement lubricant should be sprayed into the blower lubrication port before shutting down the machine. Lubricate the vacuum blower daily to prevent rust deposits and moisture that will decrease the life or seize the vacuum blower.

Read the vacuum blower manual carefully for proper oil change and grease application. The maintenance log may differ slightly from the manual, but the truck-mounted carpet cleaning application is very demanding of the vacuum blower and should be maintained as per White Magic's suggestions and recommendations.

Figure 8-3 : Filter Box

The vacuum tank is protected from overflowing by a vacuum tank float kill switch. The switch is not activated by foam, only by liquid.

OPTIONAL FILTER SYSTEM

White Magic has designed an optional filter system that when used will eliminate any particles from going into the recovery tank. The filter system has its own high grade filter to trap lint, sand and dirt along with carpet fibers. When emptied at the end of each job no debris will ever reach the recovery tank.

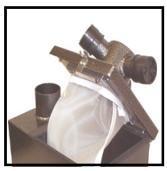

Figure 8-4 : Filter

This option is required for operation with optional pump out system.

The following pages will give troubleshooting tips when loss of vacuum or vacuum problems may arise.

BLOWER TROUBLESHOOTING

PROBLEM:

There is no vacuum or there is a loss of vacuum:

Stainless steel filter is clogged.
⇒ Clean or replace the filter.

Belts are loose or glazed and are slipping.
⇒ Replace belts with correct size.

Filter system bag is clogged.
⇒ Clean or replace the filter bag.

Vacuum tank dump valve is open or defective.
⇒ If water drips from the dump valve when the machine is not running, the valve will cause a vacuum loss when the machine is running.
⇒ Replace if it is defective.

Vacuum hose is plugged.
⇒ Remove the obstruction by reversing the vacuum hose.

Restriction in the cleaning tool.
⇒ Check and remove the obstruction.

Vacuum tank gasket is defective.
⇒ Check and replace gaskets.

Filter box cover and/or gasket is defective.
⇒ Check and replace as necessary

Hose from the blower to the recovery tank is kinked or has collapsed inside.
⇒ Replace or reshape the hose.
(Note: A special reinforced hose is required for replacement.)

Hole in the recovery tank.
⇒ Inspect the tank for leaks using smoke and weld the tank if it is required.

Hole in the vacuum hose.
⇒ Repair or replace the hose.

Vacuum relief is loose.
⇒ The vacuum relief should be set at 14” Hg.
⇒ Check and readjust.

CHECK: **VACUUM GAUGE**

- Using an auxiliary vacuum meter to assure gauge is displaying a proper reading.
- Tubing to gauge for cracks or leaks.

Figure 8-5 : Vacuum Gauge

CHECK: **ROOTS™ BLOWER**

- Belts for proper tension.
- Slipping belts *(This will not allow the blower to turn at the proper speed). (Note: This is usually indicated by a squealing sound)*
- Excessive belt wear. *(Replace belts as needed)*
- Blower is not getting excessively hot. *(This is usually indicated by the scent and or the appearance of burning paint on the blower).*
- Remove the drive belts from the engine and assure that the blower turns freely by hand and that there is no free play in the input shaft.

Engine speed is too low.

⇒ Check engine speed and adjust.

Back pressure (Excessive).

⇒ Check for restrictions in the blower exhaust system (including heat exchangers) and assembly.

⇒ Clean or replace.

The vacuum blower's end plates or lobes are worn.

⇒ Replace the worn components.

⇒ This must be accomplished by a qualified technician.

The blower is out of oil or the gears may be bad.

⇒ Permanent damage may result from a lack of lubrication.

⇒ Add oil.

⇒ If the noise continues, replace the gears or blower.

⇒ Must be accomplished by a qualified technician.

The blower lobes are locked up because of rust.

Important:

Procedure:

Most burnt foam and rust can be removed by soaking the lobes with liquid wrench or diesel fuel directly into the blower, allow to sit for 20 minutes or so then try to free the blower by hand until it spins freely. It may help to loosen end plate bolts (1) turn and tapping endplates to free blower. When blower is free start machine and run excess fluid from blower. You can clean the blower by pouring 2 cups of hot soapy water directly into the blower. Allow the machine to run an additional 5 minutes after your finished to dry the blower completely out. Spray a water displacement lubricant into the lubrication port when finished.

There is debris in the blower

⇒ Remove the debris.

⇒ A stainless filter is provided at the vacuum inlet on the vacuum recovery tank to prevent this problem.

The blower has broken gears.

⇒ Call Roots™ for authorized service center (See Roots™ owner's manual - Section 12)

⇒ Have the blower rebuilt or replaced, unauthorized attempts at equipment repair may void Roots™ warranty.

HIGH PRESSURE PUMP TROUBLESHOOTING

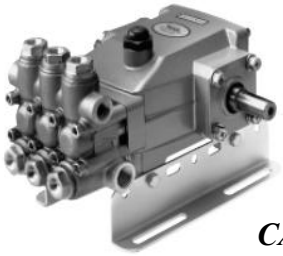

CAT PUMP®
763-780-5440

COMMANDER HO 5CP *CAT PUMP®* PLUNGER PUMP

DAILY:
Check that system pressure drops to zero or near zero when the trigger wand is released. If not or if pressure "spikes" it is an indication of a leak, air in the system or other problems.

Check the oil level and the condition of the oil. The oil level should be halfway between dot in center and the top of the sight glass on the back of he pump. *(See picture below)*

NOTE: White Magic Inc. recommends *CAT PUMP® oil or equivalent is used.*

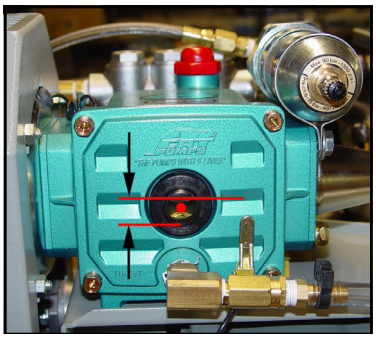

Figure 8-6 : *CAT PUMP®* Oil Level

CAUTION

If the oil becomes discolored and contaminated, one of the oil seals may be damaged. (Refer to the Service Section).

CAUTION

Do not leave contaminated oil in the pump housing or leave the housing empty. Remove contaminated oil as soon as it is discovered and replace it with clean oil.

Change the oil after the first 100 hours of operation, and every 250 operating hours after. When changing, open the ball valve on the pressure pump then remove the drain plug on the front of the machine, open the ball valve on the front of the machine to drain the oil into a catch container.

Important:

Discard any used oil in accordance with used motor oil *(HAZARDOUS WASTE)* in your area. Be mindful of the environment. Before draining any fluid or waste observe all regulations for the disposal of such items.

CAUTION

Do not start machine or turn the crankshaft of the pump with no oil in the reservoir.

CAUTION

Always protect the pump from freezing.

PUMP TROUBLE SHOOTING

A pumping system cannot put out what it cannot take in. This means that you should assure that the pump input is adequate (restriction free) and that it is not drawing air or pump damage will occur.
If the input line to the pump is blocked it will cause cavitation in the pump resulting in premature pump failure.

TO TEST THE PUMP:
It may be necessary to disconnect the ***input*** and ***output*** plumbing and replace it with short pieces of hose connected directly to the pump. This will determine if the pumping system failure is ***internal*** or ***external*** to the pumping system. Operate the *CAT PUMP*® 5CP pump at normal speed and have the chemical adjust valve turned "OFF". The *CAT PUMP*® output should be approximately **(4) GPM** for the Commander HO.

PROBLEM:

LEAKS: This is indicated by "spiking" or un-maintained pressure when wand is released.

- ⇒ Leaky disconnects.
- ⇒ Leaky swivel.
- ⇒ Leaky hose reel(s).
- ⇒ Leaky wand valve or check ball screen.
- ⇒ Internal Heat Exchanger leak.
- ⇒ Leaky hoses or fittings on the machine itself.
- ⇒ Leaky pop-off valve.
- ⇒ Any place water might drip or trickle.

A faulty Unloader, leaking or pinched pump input hose or fitting will also cause spiking or pressure.

PROBLEM:

NO (or) LOW WATER FLOW IN SYSTEM (or low erratic pressure):

- ⇒ Check the water tank/water box has water.
- ⇒ Check that the correct size jets are on the wand.

⇒ Remove and clean check ball screen filter installed behind the jet, assure that the check valve spring is functioning properly.
⇒ Check for plugged or defective quick disconnects. Test disconnects on all solution lines. *(Replace a needed)*
⇒ Swap solution lines, then swap from WAND1 to WAND2 to troubleshoot disconnects.

NOTE: ***A disconnect can be an intermittent problem.***

⇒ Check machine for mineral deposits in the system. The machine will need to be de-scaled with a de-scaling solution.

NOTE: ***The pressure gauge may still read (0) zero even with restrictions.***

⇒ Check all lines and hoes for any pinches or kinks, between the water tank and pump input.
⇒ Check the filter screen in the water tank/water box.
⇒ Check for sediment build up in the fresh water tank.
⇒ Check fresh water tank over flow vent hose may be plugged or pinched.
⇒ Check that water selection valve at pump and water tank are properly set.
⇒ Check that "**WATER RECOVERY**" switch is in "**NORMAL**" position. (*CAT PUMP® clutch is engaged)*

PROBLEM:

Figure 8-7 : Unloader

LOW OR NO PUMP PRESSURE:

1. The system may have a leak.

CHECK:

⇒ The pressure relief valve may be defective or incorrectly adjusted.
⇒ Check for incoming water leaks.
⇒ Check for defective disconnect or ball valve on the fresh water tank *(if equipped)* causing the pump to pump air.
⇒ Check all hoses for pinholes, leaks, cuts or crimped. *(Replace as necessary)*
⇒ Check pump input on the front of the machine is not loose or defective also check the rubber hose washer is not damaged or missing. *(Replace any defective parts)*

2. The *CAT PUMP*® (or) pressure regulating Unloader may be defective or damaged.

WARNING

Without using water carefully ***(BE CAREFUL HOSE DOES NOT BLOW OFF)*** *squeeze bypass hose* ***(3/8" hose from Unloader to water box).*** *The pressure on gauge should increase. This means that the CAT PUMP® is capable of pressure. If pressure does not increase that means that the CAT PUMP® is not capable of putting out pressure. If the pump is pumping, but pressure cannot be increased by adjusting unloader, (the unloader is defective).*

CHECK:

⇒ The inlet seals may be allowing the *CAT PUMP*® to pump air.
⇒ The check valves may be faulty or dirty and not properly functioning, allowing water to flow both ways. *(Clean or replace)*
⇒ The pump may have a damaged or defective high or low-pressure seals. *(Replace damaged seals with new ones)*
⇒ Check input strainer for debris and clean if necessary. Also check strainer gasket for any defects. *(Replace if necessary)*

3. There may be a leak inside the main Heat Exchanger System.

CHECK:

⇒ If the First Stage (Bottom) or Second Stage (Top) Heat Exchanger is leaking, the machine will discharge water out of the Heat Exchanger exhaust. Make sure that the discharge is not just condensed water normally produced by combustion engines. Have the heat exchanger professionally repaired or replace as necessary.

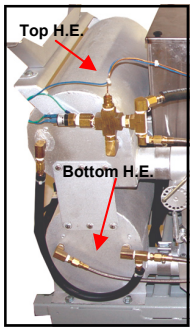

Figure 8-8 : Heat Exchangers

4. The machine may have massive or multiple leaks.

CHECK:

⇒ Hoses, fittings, connectors and valves. *(This damage is usually attributed to freeze damage)*
⇒ The machine should be checked out thoroughly for **ALL** damage when repaired.

5. The system may be suffering from a mechanical problem.

LOCATE & REPAIR:

⇒ The *CAT PUMP*® (RPM) may not be turning properly.

⇒ The machine engine may NOT be operating at the proper (RPM).
⇒ The Engine may be excessively worn.
- Due to improper use.
- Lack of maintenance.
- Excessive hours of operation.

6. The engine may be in need of a scheduled tune up.

7. The engine may not be getting an adequate supply of fuel.

CHECK:

⇒ for any blocked, pinched or restricted fuel lines. *(Replace as needed)*

8. The engine air filter may need to be replaced.

CHECK:

⇒ Air filter may be clogged, dirty, or restricted. *(Replace as necessary)*

9. The belts on the machine may be slipping or missing all together.

CHECK:

⇒ Belts. *(See poor vacuum section)*

10. There may be a severe mechanical problem with the *CAT PUMP®*.

CHECK: ***(Refer to drawing PA2200 in Section 11 for identification)***

⇒ Crankshaft. *(Broken - Repair or replace as necessary)*
⇒ Connecting rod (s). *(Repair or replace as necessary)*
⇒ Plunger (s). *(Repair or replace as necessary)*

PROBLEM:

LOW OR NO PULSE/CHEMICAL PUMP PRESSURE:

Check pump inlet plumbing, filter, etc. and check pump output volume before the following items.

1. There is no chemical flow and the Pulse Pump WILL NOT prime.

CHECK:

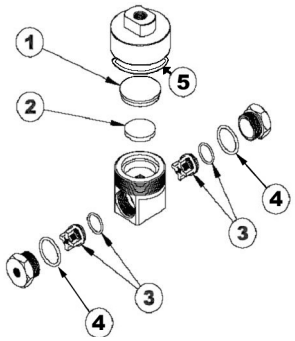

Figure 8-9 : Chemical Pump Parts

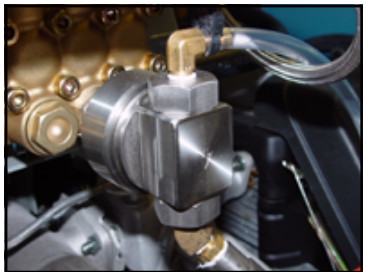

Figure 8-10 : Chemical Pump

- ⇒ Prime hose from the chemical switch is securely attached to the Recovery Tank.
- ⇒ Hose is not kinked, pinched, cut or damaged.
- ⇒ There is at least 10’’Hg of vacuum from the recovery tank.
- ⇒ Check to assure that the filter screen in the chemical jug is clean. Some deposits from certain chemicals are clear or white causing the filter to appear clean when it is really clogged.
- ⇒ Check to make sure the chemical flow meter is functioning properly by the following:
  1. Remove the clear plastic hose from the input side of the Pulse Pump.
  2. Remove the line from the chemical jug, filter and all.
  3. Clean the end of the chemical pick up hose and filter thoroughly and rinse off in clean water.
  4. Blow air in through the filter into the chemical pick up line. The metal ball in the Flow Meter should rise in a smooth motion when you blow air in the hose, if not the pick up screen is clogged or the ball is jammed. *(Repair or replace the affected part)*

2. There is still no chemical.

CHECK:

- ⇒ Replace the clear plastic hose from the chemical jug to the Pulse Pump. The hose may have holes or cracks allowing air to enter the line. Once replaced try to prime the system again.
- ⇒ Remove the pulse Pump from the *CAT PUMP®* assembly.
- ⇒ Check the Pulse Pump for faulty check valves, diaphragm or disc.
- ⇒ Be sure the disc is properly installed with the slot facing away from the diaphragm.
- ⇒ *(Repair and replace all parts necessary)*
- ⇒ Be sure both check valves are installed in the proper direction, reinstall the Pulse Pump on the machine.
- ⇒ Try to prime the system once again.
- ⇒ The check valve located between the Pulse Pump and the face panel output manifold may be clogged, damaged or installed in the wrong flow direction. *(Repair or replace)*

NOTE: ***If the Pulse Pump still will not prime the problem must lie in the main pump or in poor pump inlet condition. See section Low or No CAT PUMP® system pressure troubleshooting.***

3. There is little chemical flow and the Pulse Pump *WILL* prime.

CHECK:

⇒ There may be a restriction in the chemical injection system.
⇒ Check the cleaning tools. An improperly working cleaning tool will affect chemical output.
⇒ Check to make sure the chemical adjust valve is functioning properly and is not clogged or defective.
⇒ Check the three way chemical valve may be clogged. *(Clean or replace)*
⇒ Check the S/S tubing between the chemical valve and the chemical adjust valve may be clogged or corroded. *(Clean or replace)*
⇒ Remove the Pulse Pump from the *CAT PUMP®* .
- Disassemble.
- Clean and inspect it as out lined in the section above.
- Look for any obstruction.

⇒ Check system for any air leaks.
- There may be a air leak in the pumping system.

NOTE:

(*Air bubbles in the system act as cushions in the CAT PUMP® and prevent the necessary pressure pulse needed to effectively move the diaphragm and thereby stop the pumping action.)*

NOTE:

A simple way to check for air in the pumping system is to place the Auxiliary Output hose in a bucket of water. With the end of the hose submerged, you should be able to tell of there is excessive air in the output of the system. Also, a very small air leak in the inlet seals of the *CAT PUMP®* or the inlet plumbing can cause problems. Often the plumping system will suck air in through a leak when the machine is running and will not leak water when the machine is off. Any air leaks that are located must be repaired.

HEATING SYSTEM:

(HOW THE HEATING SYSTEM WORKS...)

The commanders heat exchange system is a highly engineered system designed by the White Magic Corporation. The heating system is comprised of exhaust and blower heat that is captured for free heat.

Water is fed into the machine under tap pressure and it flows to the water box. The water is then picked up by the high pressure pump and pressurized to the desired

pressure level. The water then splits as demanded by the technician.

The water demanded by the technician flows from the water pressure pump through the heat exchangers then out to the cleaning tool.

When the cleaning solution reaches a preset temperature set by the cleaning technician the machine will go into a divert mode until it calls for more heat, then it goes back into the heat mode. The HeatSmart™ technology is the first of its kind in the carpet cleaning industry. There is no dumping of water into the recovery tank.

PROBLEM:

***LOW WATER TEMPERATURES*:**

The causes of low water temperature are usually easy to locate.

CHECK:

⇒ The temperature control thermostat maybe inadvertently set to its lowest setting. *(Reset temperature control dial).*

⇒ Check vacuum load on system. The actuators require *10" Hg. minimum* to operate. The systems heat is *maximized* by running *12"-14" Hg.* *(Set at a full load)*

⇒ The temperature control thermostat may be defective.
- If the temperature control thermostat has failed the heat diverting system will stay open.
- This will divert all heat away from the heat exchanger.

⇒ Check thermostat. *(Replace as necessary)*

1. ***Heat diverter is operating incorrectly*:**

The heat diverter may not be operating correctly allowing heat to bypass heat exchangers and exhaust through the muffler system. Diverter should pull away from the engine when the machine is started. *(If not, check the following):*

***1. Diverter may be defective*:**

Check that diverter can be actuated by hand, that it is not mechanically stuck.

***2. Vacuum solenoid switch may be defective*:**

Hook the vacuum line from the blower elbow directly to vacuum actuator and restart machine. If vacuum actuator pulls away from engine and holds vacuum solenoid switch, it is defective or has become disconnected. *(Repair or replace switch.)*

3. <u>Vacuum actuator diaphragm may be defective</u>:

If by putting vacuum directly from blower elbow to vacuum actuator doesn't allow vacuum actuator to hold vacuum, check vacuum tubing. If it is OK, *(Replace vacuum actuator).*

4. <u>Engine is running at Low RPM</u>:

The engine may be operating below the proper RPM range. Increase the engine throttle until the proper RPM range is reached. Check for proper vacuum level.

5. <u>Machine may be using too large a volume of water</u>:

Assure that the wand jets are the proper size.

6. <u>Heat Exchanger may be defective</u>:

<u>CHECK</u>:

⇒ Leaking.
⇒ Blocked.

If either is true, water will fill up in the heat exchanger and blow out of the exhaust port in front of the machine. *(Replace the heat exchanger as necessary.)*

7. <u>Pump pressure may be adjusted too high</u>:

<u>CHECK</u>:

⇒ Turn system pressure down with the unloader valve.
⇒ Normal carpet cleaning pressure is 300-500 psi.

8. <u>Solution line may be losing heat</u>:

<u>CHECK</u>:

⇒ May be losing directly due to contact with cold surfaces.
(Such as ice or snow)
⇒ Take proper steps to insulate the line from such conditions.

ELECTRICAL TROUBLESHOOTING

PROBLEM:

MACHINE WILL NOT START:

1. Circuit Breaker:

CHECK:

⇒ Circuit breaker.

⇒ Breaker may have tripped.
-Try to reset the breaker.

⇒ If the circuit breaker trips again
- Check all wiring for loose connections.

⇒ The circuit breaker may have to be replaced.

2. Engine Oil:

CHECK:

⇒ Engine oil level.

⇒ Press machine override switch.
- If machine starts there may be a defective oil pressure switch. Remove the green wire running to the face panel from the white wire running to the *KOHLER®* engine. This will bypass the oil pressure switch. If the machine starts, the switch is bad. *(Replace as necessary)*

⇒ See Engine Troubleshooting section for more info.

3. Recovery Tank:

CHECK:

⇒ Recovery tank is not full of dirty water.

⇒ Float switch is not stuck open. *(Debris or buildup around switch)*

⇒ Float switch by removing a black wire from the float. If the machine operates correctly with the wire removed, clean or replace float switch.
*(Do **NOT** run machine with out replacing switch.)*

⇒ Lamp light sockets shorts on the face panel. *(Remove and replace as necessary.)*

4. Wires:

CHECK:

⇒ Machine wires.
- Cuts.
- Loose connections.
- Burnt. *(Especially near the engine or rotating parts).*

⇒ Good ground for the machine. *(Sometimes when a machine is installed in a vehicle with a wood floor you could loose the ground. This could cause in terminate power problems).*

⇒ Kill switch wiring short to ground. *(Any short to ground will cause the engine to stop).*

⇒ Wiring for containing chemical solution on them. *(Sometimes a chemical reaction on the wiring along with water can ground them out).*

⇒ Kill switch. *(Switch itself can have an internal short to ground that will kill machine).*

⇒ Ignition key. *(Switch shuts the machine off by grounding the Kill wiring. A defective switch may have an internal short to ground present which will prevent the machine from running).*

Overheating?

If the machine stops after running for a while it could be the machine is overheating. At approximately 290˚ the machine Kill switch will trip stopping the machine. The switch may be defective. To test the switch, remove the power wire from the switch. If the unit does start with the power wire removed and the system cool (below 200˚) the switch will need to be replaced.

Other things to check for:

⇒ Diverters *(not functioning properly)*

⇒ Solenoids

⇒ Temperature Thermostat

HORSEPOWER TROUBLESHOOTING

PROBLEM:

THE MACHINE HAS EXCESSIVE HORSEPOWER DRAW:

1. Excessive Horsepower draw can be caused from:

CHECK:

⇒ Vaccuum.

⇒ Pressure settings.

⇒ Seized bearings in idlers, etc.

BELT(S) TROUBLESHOOTING

PROBLEM:

THE MACHINE IS HAVING PROBLEMS WITH BELTS:

Correct belt alignment is critical for proper machine operation.

CHECK:

⇒ Belt alignment.

Symptoms:

⇒ The machine drive belts consistently fall off the pulleys.
⇒ There is excessive wear on the pulleys, idler and blower shaft bearings.
⇒ The drive belts wear and fail prematurely.
⇒ The machine causes excessive vibration and noise.
⇒ The belts may slip and not supply adequate power to the machine.

Solutions for alignment:

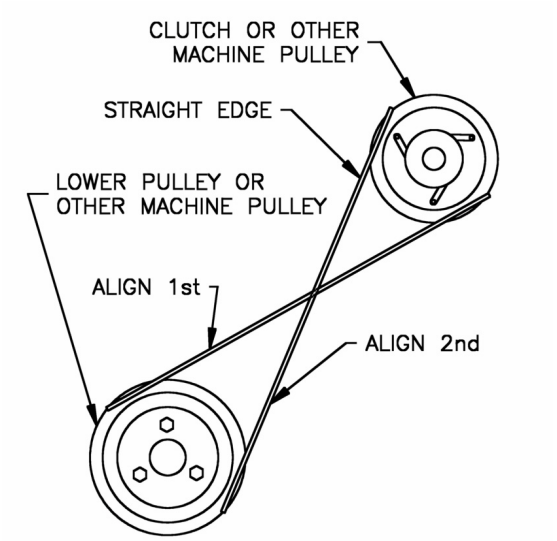

1. Run a straight edge from Pulley 1 (Engine pulley) at an angle diagonally to the edge of Pulley 2 (*Roots*™ Blower pulley, or *CAT PUMP*® pulley). Jockey the *Roots*™ blower into place until the pulleys line up on the straight edge. *(See diagram following)* The idler pulleys must also be aligned.
2. Move the straight edge to the opposite end of Pulley 1 and run at an angle diagonally to the opposite edge of Pulley 2. The two pulleys should still line up. If not the *Roots*™ blower will need to be jockeyed around until both pulleys line up in with the straight edge held in both positions. *(See diagram)* Align the idler pulley in the same manner.
3. Idler pulleys must be aligned.
4. It is important to align the *Roots*™ blower pulley with the engine pulley before attempting to align the *CAT PUMP*® pulley to the engine pulley.

Machine / Engine Bypass Procedure
(Commander & Commander HO 4-21-04)

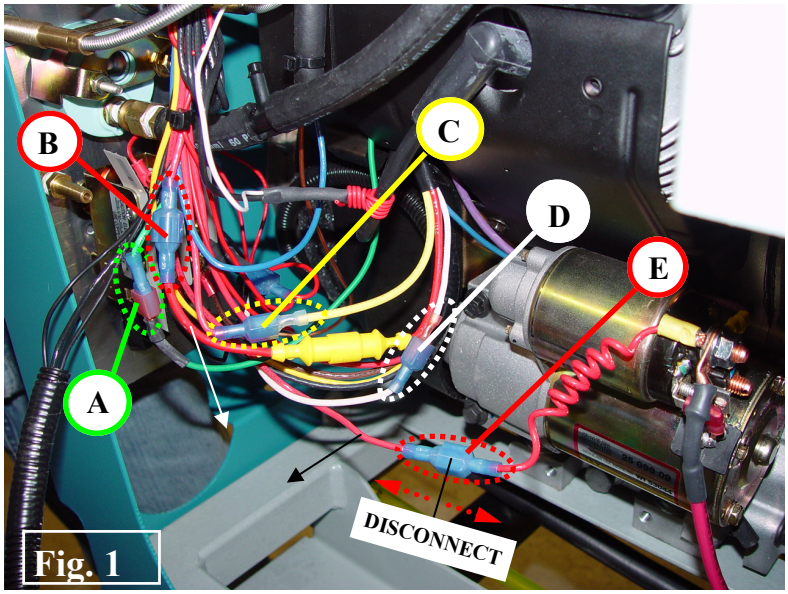

Fig. 1

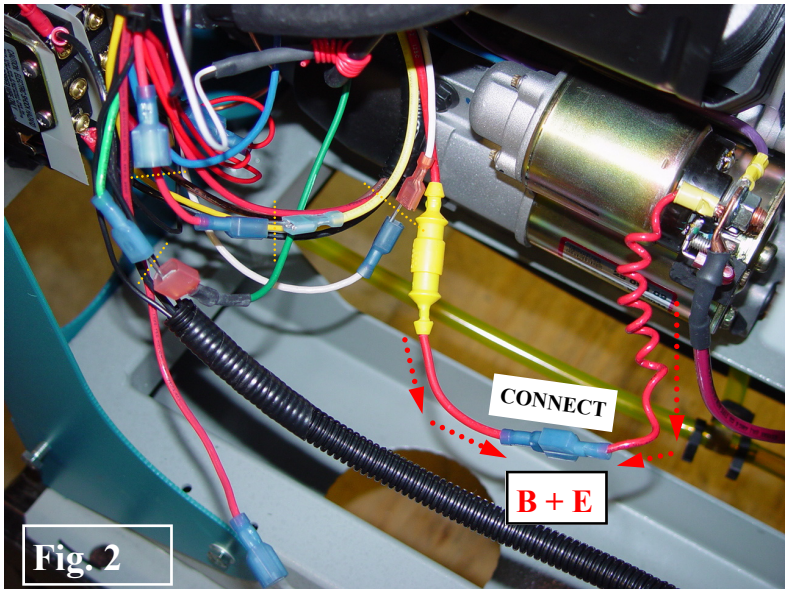

Fig. 2

1.) Disconnect the red wires at **POINT "E".**
(NOTE Tag or otherwise note wires before disconnecting)**

2.) Disconnect red wire w/ yellow fuse holder from **POINT "B".**
(NOTE Tag or otherwise note wires before disconnecting)**

3.) Connect red wire w/ yellow fuse holder to coiled red wire from "+" of starter.

4.) Disconnect yellow wire of engine from red wire and **POINT "C".**
(NOTE Tag or otherwise note wires before disconnecting)**

5.) Disconnect white wire form white wire at **POINT "D".**

6.) Disconnect green wire from green wire at **POINT "A".**

Engine can now be started and run without any effect from the machine. ****DO NOT** run any longer than necessary in this fashion as there are no controls for heat.

7.) Reverse the above process to put equipment back to the original wiring. (Check wiring diagram if necessary or if there is any possibility of having wires improperly connected.)

WHITE MAGIC INC
THREE YEAR LIMITED
WARRANTY PLAN

This warranty extends to the original purchaser of equipment upon date of installation listed in the Truckmount Document package. The Truckmount Document package MUST be returned in order to activate the truckmount warranty. Failure to return document package will result in the warranty start date being the date of shipment from the factory.

White Magic Inc. warrants truckmount machines of its manufacture to be free from defects in material and workmanship if properly installed, maintained, and operated under normal conditions with competent supervision as is illustrated within the White Magic Inc. instructional/operational Owners Service Manual. No person, agent, representative, or dealer (distributor) is authorized to give any warranties on behalf of White Magic Inc. or to assume for White Magic Inc. any liability in connection with any White Magic Inc. products.

To ensure the functionality and safety of equipment the White Magic Inc. Platinum Guarantee Warranty Plan shall cease to be in effect if modifications are made to the equipment without the express written consent of White Magic Inc. Corrosions, deposits and build up in the water, chemical, recovery or heating systems due to hardness in the water used or chemicals , will **VOID** all warranties in the affected components and areas. The use of any chemical or solvents, which may damage metal, rubber, plastic, or painted parts, will **VOID** all warranties on those parts. Freezing or over-pressurization of any water or chemical related components would **VOID** all warranties on water or chemical related components, internal or external, of the equipment.

The warranty period for the equipment, and parts, (except those listed below) is **(1) ONE YEAR** from the date of installation or **(18) EIGHTEEN MONTHS** from the date of shipment from the factory, whichever comes first. White Magic Inc. agrees, at its option, to repair or replace without charge any defective parts or products of White Magic Inc.'s manufacture, which within the warranty period. Parts supplied under this warranty themselves shall be warranted for the remaining life of the original warranty. All items that are considered by White Magic Inc., to be expendable or normal wear items in normal use, including paint and other cosmetic parts or features are not covered under the warranty. Normal maintenance procedures (oil, filter changes, belts, etc.) are not covered. The Blower, Engine, and Pump , are warranted only to the extent of the original manufacturer's warranty to White Magic Inc. Any claim that falls under the Original Manufacturer's warranty should be made in accordance with Original Manufacturer's policies for warranty claims. Always follow Original Manufacturer's warranty policy in affect at time of purchase.

The White Magic warranty also covers labor for the period **(90) NINETY DAYS** on new equipment, from the date of installation. This labor must be preauthorized by the White Magic Service Dept. and warranty work **MUST** be completed at a factory authorized repair center.

General parts orders, replacement parts, & out of warranty parts replacement carry a **(90) NINETY DAY** warranty from date of shipment. **All** parts returns are subject to a 15% restocking fee.

White Magic Inc. will pay freight and transportation charges within the United States under normal ground shipping for replacement of warranted parts for a period of **(1) ONE YEAR**. The shipment of warranted parts any faster than ground **will not** be covered.

As stated in White Magic Inc.'s warranty, only the parts and the equipment are covered. White Magic Inc. shall have no liability for: consequential, incidental, or other damages caused. This included, but is not limited to: lost business, downtime, lodging or any other incidentals.

RMA procedure is as follows: Faulty part is called into White Magic Inc. White Magic confirms failure over the phone by further diagnosis. If part is determined to be failed, RMA number is issued and part is shipped and billed according to account type. Labor coverage would be approved / denied at this time. To be covered under warranty the defective parts must be returned with an authorized RMA# to White Magic Inc. within **(30) THIRTY DAYS** of failure. When part is received, it is evaluated, and credit is approved or denied based upon testing and evaluation. Credits will be issued once a month at the end of every month. No liability shall be attached to White Magic Inc. until products have been paid for.

Extended Protection Parts:

FRAME: ……	**3 Years**	**BLOWER: {original manufacturer's warranty}**
DRIVESHAFT: ……	**3 Years**	**PUMP: {original manufacturer's warranty}**
FRESH WATER & RECOVERY TANKS: …….	**3 Years**	**ENGINE: {original manufacturer's warranty}**
S.S. HEAT EXCHANGERS: ……	**3 Years**	
WHITE MAGIC MANUFACTURED PARTS: ..	**2 Years**	

(All features, specifications and warranty are subject to change without notice on White Magic Inc. or Original Manufacturer's warranty.)

Commander & H.O. External Parts Identification

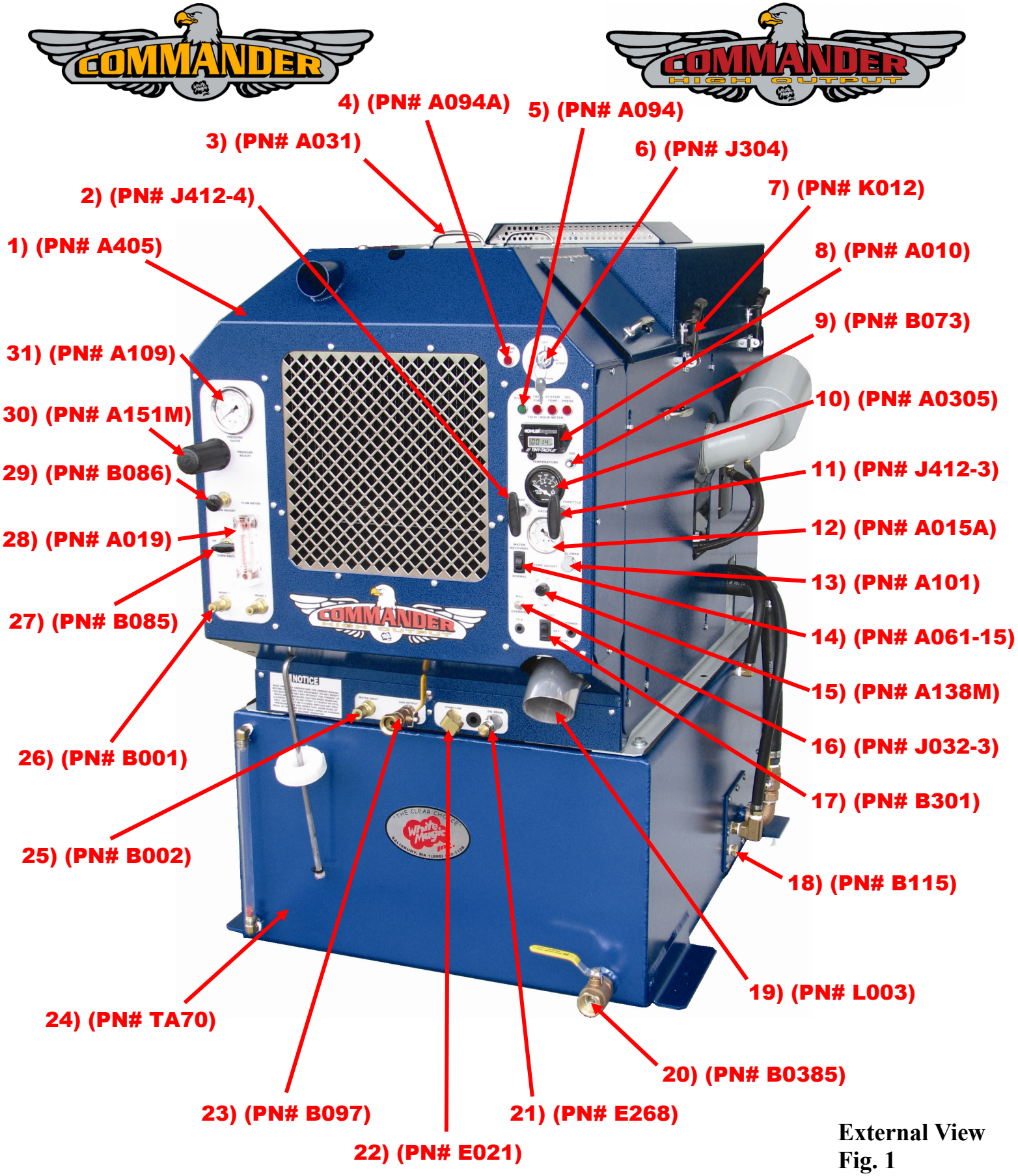

External View
Fig. 1

External View Fig. 1:

1.) **(PN# A405) Console Assembly, Commander & HO:** Console assembly is conveniently removed to access the internal components of your Slide-In Carpet Cleaning Machine.

2.) **(PN# J412-4) Choke Cable:** A heavy duty choke cable controls the choke on your machine.

3.) **(PN# A031) Handle - Console Assembly, Commander & HO:** Convenient handle for lifting the top console on and off your machine.

4.) **(PN# A094A) Indicator Light, Red:** The machine will tell the operator the status of the operating features of the machine. When these lights are activated they will inform the operator which system shut down the unit. These safety features include: low engine oil switch, full recovery tank & high solution temperature.

5.) **(PN# A094) Indicator Light, Green:** A green light to indicate a your if truckmount is in diverter mode.

6.) **(PN# J304) Ignition Switch, Kohler Engines:** Remote Ignition located on the front of the face panel allows for easy starting the machine.

7.) **(PN# K012) Flexible Draw Latch:** An easily manipulated rubber draw latch that seals your console assembly closed.

8.) **(PN# A010) Tiny Tach / Hourmeter:** White Magic slide-in machines are all equipped with a digital tachometer and hour meter. Produced by *KOHLER*® this precise gauge gives the true RPM of the engine.

9.) **(PN# B073) 20 Amp Circuit Breaker:** Protects the electrical components of your White Magic Truckmount.

10.) **(PN# A0305) Temperature Gauge:** Designed for ease of operation simply, pull the trigger and watch your temperature soar. The gauge will read up 330°F and its sending unit is placed right before the heated solution exits the machine. This added benefit allows the operator to know the exact temperature output (within a few degrees), at the wand.

11.) **(PN# J412-3) Throttle Cable:** User friendly, the choke and throttle cables easily pull out and with just a twist locks at the desired setting.

12.) **(PN# A015A) Vacuum Gauge:** This glycerin filled gauge displays the vacuum lift of the blower, routine check of this gauge during operation will help determine if maintenance of the vacuum system is required.

13.) **(PN# A101) Blower Lubrication Port:** Conveniently located on the face panel of the machine, allows for proper lubrication of the blower.

External View Fig. 1 (continued…):

14.) **(PN# A061-15) Water Recovery Switch:** With just a flip of this switch the machine can go from normal carpet cleaning operation in to water extraction. When this switch is activated it automatically turns the pump clutch off and closes both of the heat diverters. Now with no heat entering the heat exchange system and the pump not working the machine can run for days with out ever having to supply the machine with water. This is an absolute must for water damage operations.

15.) **(PN# A138M) Temperature Controller:** This fully adjustable feature controls the HeatSmart™ system. When the desired temperature is selected the machine automatically regulates the exhaust diverters to maintain the proper temperature.

16.) **(PN# J032-3) Engine Kill Override:** When one of the three kill switches shuts the machine down, by pressing this button it allows the operator to diagnose the systems and make corrections to restart the machine.

17.) **(PN# B301) Auto Pump-out Control:** Every White Magic machine is pre-wired for our external Auto Pump-out System regardless if the machine is ordered with one or not, its there for future use if necessary.

18.) **(PN# B115) Magnesium Sacrificial Anode:** Protect your water storage tank with this magnesium anode. Replace every 6 months or as needed.

19.) **(PN# L003) Ceramic Coated Exhaust Tip:** Chrome plated will look great even after years of use. The exhaust from both the blower and engine exit the machine through the face panel. It can also be installed so the exhaust may be run down through the floor of the vehicle.

20.) **(PN# B0385) Water Tank Drain Valve:** A 1" ball valve used to drain the fresh water tank.

21.) **(PN# E268) Oil Drain Valve:** All the oil drains on the machines are installed into a central line that is accessible in the front of the machine. This allows for simple oil changes with little or no mess to clean up after. No more spilling oil all over the inside of the machine.

22.) **(PN# E021) Overflow Protection:** This port allows for the proper operation of both the water box and fresh water tank (if equipped) and prevents premature failure of the water system.

23.) **(PN# B097) Auxiliary Output Valve:** This allows access to warm water straight out of the face panel on the machine. It is an outstanding benefit for filling sprayer or diluting chemicals.

24.) **(PN# TA70) 70 Gallon Submount Fresh Water Tank (Optional):** An optional submount water tank that conveniently saves space in your van and holds 70 gallons of fresh water to feed your machine.

25.) **(PN# B002) Water Supply Input:** Whether the machine is equipped with a fresh water tank or not, the water supply is connected here.

External View Fig. 1 (continued…):

26.) **(PN# B001) Solution Disconnects**: Two disconnects gives this machine limited dual wand capabilities. Located far away from any electrical components. The disconnects allow for easy hook up of live reels or wands.

27.) **(PN# B085) Chemical Selector Valve**: This three-way valve allows the operator to turn on, off, or prime the chemical system. The priming mechanism is vacuum assisted which allows a complete & instantaneous prime each and every time.

28.) **(PN# A019) Chemical Flow Meter:** The chemical flow meter displays the flow of chemical going to the cleaning tool. Read in GPH (gallons per hour) this is a more consistent chemical flow compared to other systems that meter CCM.

29.) **(PN# B086) Chemical Adjustment Knob**: By turning this knob it allows the operator to adjust the chemical flow from 0-5 GPH.

30.) **(PN# A151M) Unloader Valve**: This allows the operator to adjust the working pressure of the pumping system of the machine. Unlike a pressure regulator system the unloader valve releases the pressure off of the pump and pump components preventing premature failure of the pumping system.

31.) **(PN# A109) Pressure Gauge**: The pressure gauge tells the operator the setting of the unloader valve and the pressure output of the pump.

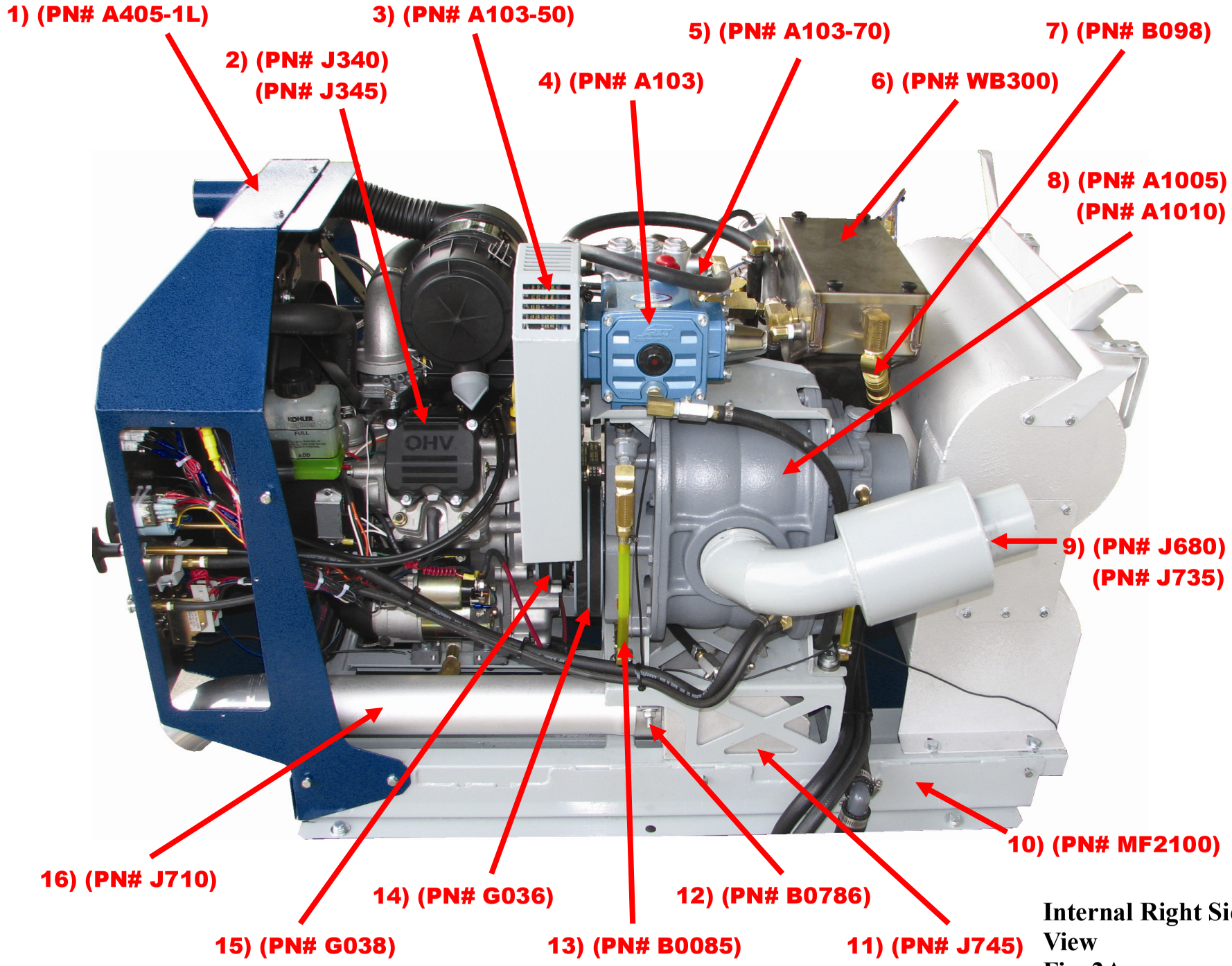

Internal Right Side View
Fig. 2A

Internal Right Side View Fig. 2A:

1.) **(PN# A405-1L) Front Console w/Partition Baffle:** (face panel) One of the most important feature of any slide in system, but the most over looked is the Partition Baffle. The Partition Baffle is responsible in preventing the re-circulation of heated air generated by the engine & heat exchange system. All White Magic slide-ins have been designed with this feature in mind. The signature series partition baffles are connected by gasket materials to the air intake of the engine housing to insure proper air flow of the machine is achieved.

2.) **(PN# J340, J345) Engine(s):** 24 HP *KOHLER AEGIS*® Liquid Cooled Engine (Commander) . 28 HP *KOHLER AEGIS*® Liquid Cooled Engine (Commander HO). *KOHLER AEGIS*® Engines are designed with overhead -valves, exclusive hydraulic valve lifters, full pressure lubrication.

3.) **(PN# A103-50) Pump Disengagement Clutch:** This allows the machine to quickly go between carpet cleaning operations to flood extraction work. With just a flip of the switch the pump clutch disengages, stopping the pump from functioning. The clutch & belts are covered by an aluminum safety guard, protecting the operator and machine from harm.

4.) **(PN# A103) *CAT PUMP*® 5CP Pump:** Far superior from any other pump manufacturers, *CAT PUMP*® delivers outstanding reliability and performance. Mounted in the machine high above all other components allows for quick and easy service of the pump. While performing service the pump does not need to be un-bolted or readjusted, all service can be done in place. This saves hours of down time and expense to the equipment owner.

5.) **(PN# A103-70) Pulsation Hose:** As the ceramic plungers of the CAT Pump push water into the system, a vibration is given off. The pulsation or vibration is absorbed helping prevent premature failure of fittings and components.

6.) **(PN# WB300) Water Box:** Constructed from Stainless Steel, the water box provides the incoming water to the pump. The box can contain a max. of (2) gallons of water and has a whole host of features. Located above all of the other components the water box is hung in place and secured with only (1) ¼" 20 bolt, allowing the box to be quickly removed if service is necessary. The water box has (4) easy to remove thumb-screws that holds down the gasketed cover, preventing water from spilling over on to the machine. The water box also has overflow protection, filtered input and allows for simple winterization of the machine in cold weather climates.

7.) **(PN# B098) Water Pressure Reducer:** Located on the input of the water box the pressure reducer assures that the input water pressure is consistent, for extra protection of the internal float valve.

8.) **(PN# A1005, A1010) *ROOTS*™ 45 Blower (Commander), *ROOTS*™ 47 Blower (HO):** White Magic has selected *DRESSER ROOTS*™ as our exclusive vendor for Vacuum Blowers. The Commander is outfitted with the *ROOTS*™ 45 blower providing 345 CFM and 14"Hg of vacuum lift. The Commander HO is outfitted with the *ROOTS*™ 47 blower providing 460 CFM and 14"Hg of vacuum lift. These blowers are capable of producing exceptional performance for all aspects of upholstery cleaning to water extraction. The dual lobe blower design is far superior and more reliable to the new tri-lobe blower designs available in the cleaning industry.

Internal Right Side View Fig. 2A (continued….):

9, 11.) (PN# J680, J685, J735, J745) Progressive Silencing System: White Magic engineers have worked tirelessly to maximize performance without restricting airflow. The Progressive Silencing system works by stepping down the noise generated by the carpet cleaning system at specific locations throughout the machine.

10.) (PN# MF2100) Frame Assembly: Constructed from heavy gauge steel, the frame also provides easy lifting with its built in fork lift pads.

12.) (PN# B0786) 3" Muffler Clamp: High Quality, Heavy Duty muffler clamps hold the exhaust system in our truckmounted cleaning systems.

13.) (PN# B0085) Blower Oil Lever Sight Tube: Made of High Quality TYGON Tubing, this sight tube provides easy views of the blower oil level.

14.) (PN# G036) Blower V-Belts: (2) 36" Industrial Strength V-Belts drive your vacuum blower.

15.) (PN# G038) Pump V-Belts: (2) 38" Industrial Strength V-Belts drive your high pressure pump.

16.) (PN# J710) Exhaust Pipe: Directs exhaust gasses out of the front of your machine and out of the van.

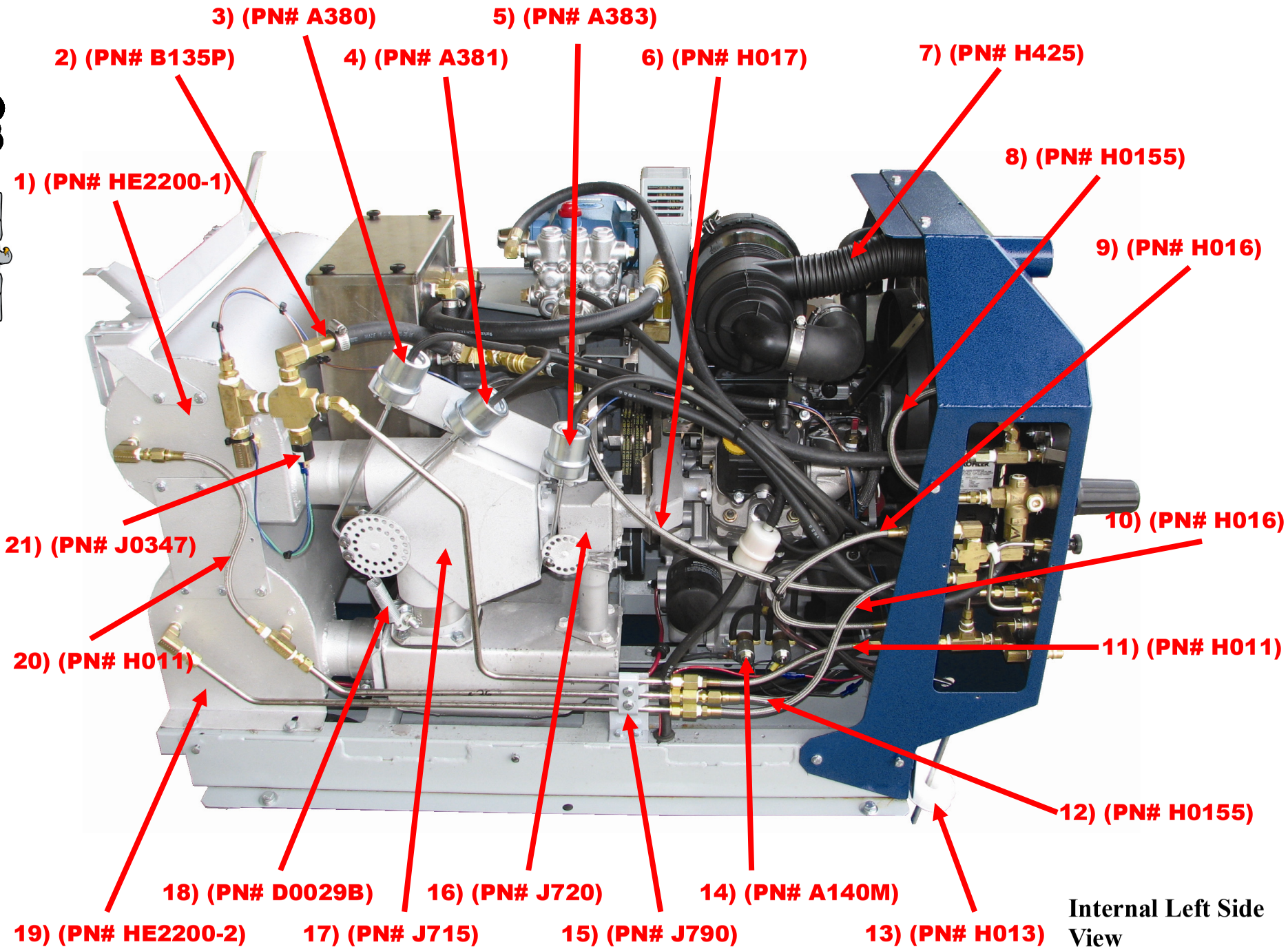

Internal Left Side View
Fig. 2B

Internal Left Side View Fig. 2A:

1., 19) (PN# HE2200-1, HE2200-2) Heat Exchange System: Making up the heart of the Heatsmart™ Technology is our double barrel heat exchanger. Constructed using White Magic exclusive High Efficiency Finned Copper Coil, this coil is far superior to other coil designs found elsewhere in the United States. The heat exchanger is designed to maximize both air-flow and heat transfer. As the water flows through the heat exchanger it enters at the coolest point and exits the heat exchanger at the hottest point. This is commonly referred to as Reverse Flow.

2.) (PN# B135P) Pressure Relief Valve: This valve is factory set to prevent over pressurization of the machine. When the machine reaches its setting the valve opens to relieve excess pressure being developed by the pumping system. This valve allows the operator to adjust the pressure up to 1200 PSI for tile and grout cleaning.

3, 4, 5.) (PN# A380, A381, A383) Vacuum Actuators: Opens and closes the Heat Diverters to maintain and control water temperature.

6, 8 - 12, 20.) (PN# H011, H0155, H016, H017) Stainless Steel Braided Hoses: White Magic uses only Stainless Steel high-pressure hoses to interconnect the systems solution and pumping system.

7.) (PN# H425) Flexible Hose, Air Input: Connects the Air Cleaner on your machine to the fresh outside air.

13.) (PN# H013) Chemical Jug Input Line: Connects your chemical pump to your mixed chemical in the chemical jug.

14.) (PN# A140M) Vacuum Solenoid: As the temperature reaches its predetermined setting established by the operator, the Temperature Sensor sends an electrical signal to the vacuum solenoid which activates the Vacuum Pods to open and close the Heat Diverters to maintain the desired operating solution temperatures.

15.) (PN# J790) Tube Clamp: Connects your chemical pump to your mixed chemical in the chemical jug.

16.) (PN# J720) Engine Exhaust Diverter: This component operates by directing the flow of hot gases produced by the engine. During operation of the machine the heat generated by the engines exhaust will flow into the heat exchange system to heat the cleaning solution. Once the cleaning solution has reach the pre-determined temperature set by the operator the temperature sensor will activate the vacuum diverter control closing the Exhaust Diverter preventing the hot gases from entering the heat exchange systems. The Heat Diverters internal components are made from Stainless Steel and are nickel-plated to extend life of the diverter.

Internal Left Side View Fig. 2A (continued…):

17.) **(PN# J715) Blower Exhaust Diverter:** Working in conjunction with the engine exhaust diverter is White Magic's exclusive blower exhaust diverter. This diverter protects the system from over heating. After the engine exhaust diverter has closed, and if the solution temperature continues to rise, the blower exhaust diverter will then activate, preventing any of the heat generated by the blower from entering the Heat Exchange System. This is an exceptional feature for water recovery operations. When the machine is placed into water recovery mode both the Engine Exhaust Diverter and Blower Exhaust Diverter are activated. This prevents any heat generated from entering the heat exchange system, allowing the machine to run continuously for hours with no water in the system.

18.) **(PN# D0029B) Heavy Duty Spring:** Assists the blower diverter in closing while under a vacuum load.

21.) **(PN# J0347) High Temperature Kill Switch:** This safety feature protects the operator, bystanders and the machine from dangerous overheating of the systems water temperature rating. This Safety Kill Switch will shut the machines engine down if the solution temperature exceeds 275°F. If this occurs the operator can quickly determine the cause or the shut down by looking at the indicator lights on the face panel of the machine.

OWNER'S MANUAL

KOHLER AEGIS®

LH630, LH640, LH685, LH690, LH755, LH775

LIQUID-COOLED

HORIZONTAL CRANKSHAFT

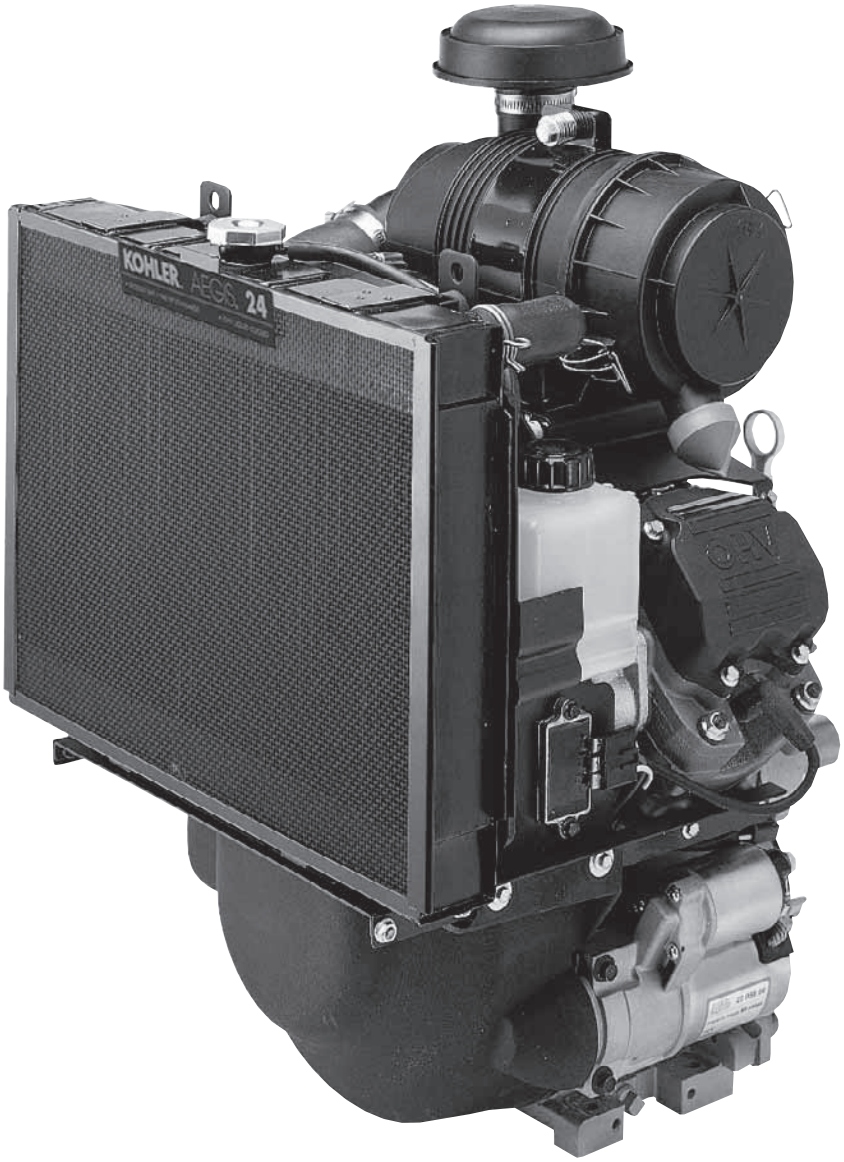

KOHLER® ENGINES

Safety Precautions

To ensure safe operations please read the following statements and understand their meaning. Also refer to your equipment owner's manual for other important safety information. This manual contains safety precautions which are explained below. Please read carefully.

WARNING

Warning is used to indicate the presence of a hazard that *can* cause *severe* personal injury, death, or substantial property damage if the warning is ignored.

CAUTION

Caution is used to indicate the presence of a hazard that *will* or *can* cause *minor* personal injury or property damage if the caution is ignored.

NOTE

Note is used to notify people of installation, operation, or maintenance information that is important but not hazard-related.

For Your Safety!

These precautions should be followed at all times. Failure to follow these precautions could result in injury to yourself and others.

WARNING

Explosive Fuel can cause fires and severe burns.

Stop engine before filling fuel tank.

Explosive Fuel!

Gasoline is extremely flammable and its vapors can explode if ignited. Store gasoline only in approved containers, in well ventilated, unoccupied buildings, away from sparks or flames. Do not fill the fuel tank while the engine is hot or running, since spilled fuel could ignite if it comes in contact with hot parts or sparks from ignition. Do not start the engine near spilled fuel. Never use gasoline as a cleaning agent.

WARNING

Hot liquid can cause severe burns.

Do not loosen radiator cap while engine is operating or warm to the touch.

Hot Liquid!

The liquid coolant can get extremely hot from operation. Turning the radiator cap when the engine is hot can allow steam and scalding liquid to blow out and burn you severely.

Shut off machine. Only remove radiator cap when cool enough to touch with bare hands. Slowly loosen cap to first stop to relieve pressure before removing completely.

WARNING

Hot Parts can cause severe burns.

Do not touch engine while operating or just after stopping.

Hot Parts!

Engine components can get extremely hot from operation. To prevent severe burns, do not touch these areas while the engine is running, or immediately after it is turned off. Never operate the engine with heat shields or guards removed.

California Proposition 65 Warning

Engine exhaust from this product contains chemicals known to the State of California to cause cancer, birth defects, or other reproductive harm.

Safety Precautions (Cont.)

⚠ WARNING

Accidental Starts can cause severe injury or death.

Disconnect and ground spark plug leads before servicing.

Accidental Starts!
Disabling engine. Accidental starting can cause severe injury or death. *Before working on the engine or equipment, disable the engine as follows: 1) Disconnect the spark plug lead(s). 2) Disconnect negative (-) battery cable from battery.*

⚠ WARNING

Carbon Monoxide can cause severe nausea, fainting or death.

Do not operate engine in closed or confined area.

Lethal Exhaust Gases!
Engine exhaust gases contain poisonous carbon monoxide. Carbon monoxide is odorless, colorless, and can cause death if inhaled. Avoid inhaling exhaust fumes, and never run the engine in a closed building or confined area.

⚠ WARNING

Explosive Gas can cause fires and severe acid burns.

Charge battery only in a well ventilated area. Keep sources of ignition away.

Explosive Gas!
Batteries produce explosive hydrogen gas while being charged. To prevent a fire or explosion, charge batteries only in well ventilated areas. Keep sparks, open flames, and other sources of ignition away from the battery at all times. Keep batteries out of the reach of children. Remove all jewelry when servicing batteries.

Before disconnecting the negative (-) ground cable, make sure all switches are OFF. If ON, a spark will occur at the ground cable terminal which could cause an explosion if hydrogen gas or gasoline vapors are present.

⚠ CAUTION

Electrical Shock can cause injury.

Do not touch wires while engine is running.

Electrical Shock!
Never touch electrical wires or components while the engine is running. They can be sources of electrical shock.

⚠ WARNING

Rotating Parts can cause severe injury.

Stay away while engine is in operation.

Rotating Parts!
Keep hands, feet, hair, and clothing away from all moving parts to prevent injury. Never operate the engine with covers, shrouds, or guards removed.

Congratulations – You have selected a fine four-cycle, twin cylinder, liquid-cooled engine. Kohler designs long life strength and on-the-job durability into each engine...making a Kohler engine dependable...dependability you can count on. Here are some reasons why:

- Efficient overhead valve design, and pressure lubrication provide maximum power, torque, and reliability under all operating conditions.
- Dependable, maintenance-free electronic ignition ensures fast, easy starts time after time.
- Kohler engines are easy to service. All routine service areas (like the dipstick and oil fill, air cleaner, spark plugs, and carburetor) are easily and quickly accessible.
- Parts subject to the most wear and tear (like the cylinder liner and camshaft) are made from precision formulated cast iron.
- Every Kohler engine is backed by a worldwide network of over 10,000 distributors and dealers. Service support is just a phone call away. Call 1-800-544-2444 (U.S. & Canada) for Sales & Service assistance.

To keep your engine in top operating condition, follow the maintenance procedures in this manual.

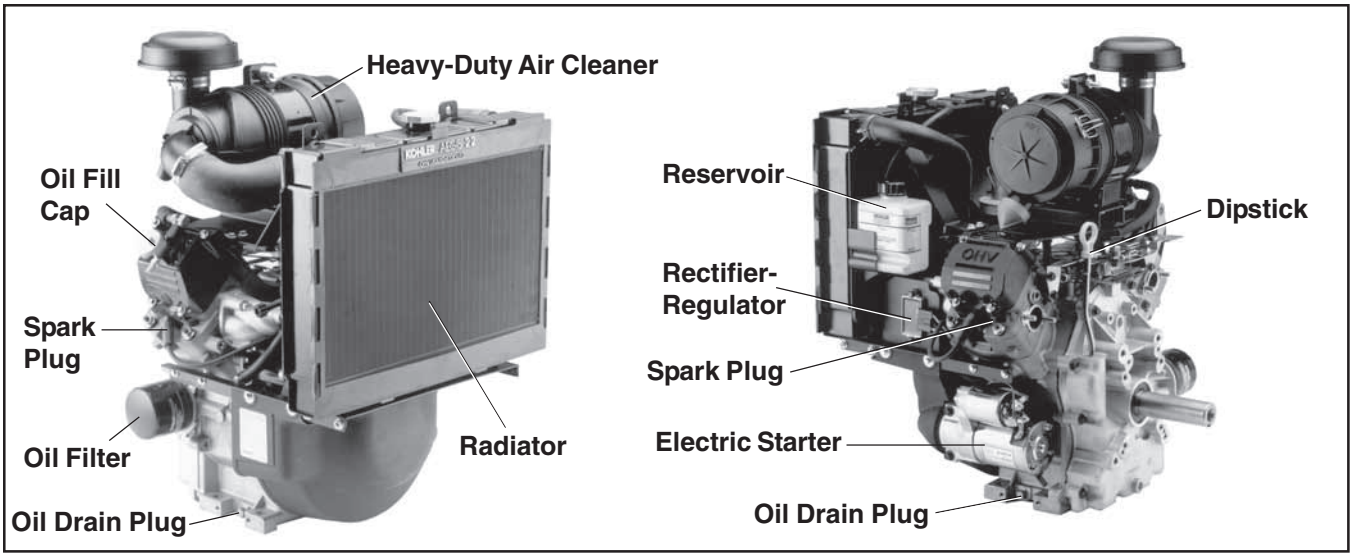

Figure 1. Typical Kohler Aegis® Carbureted Engine.

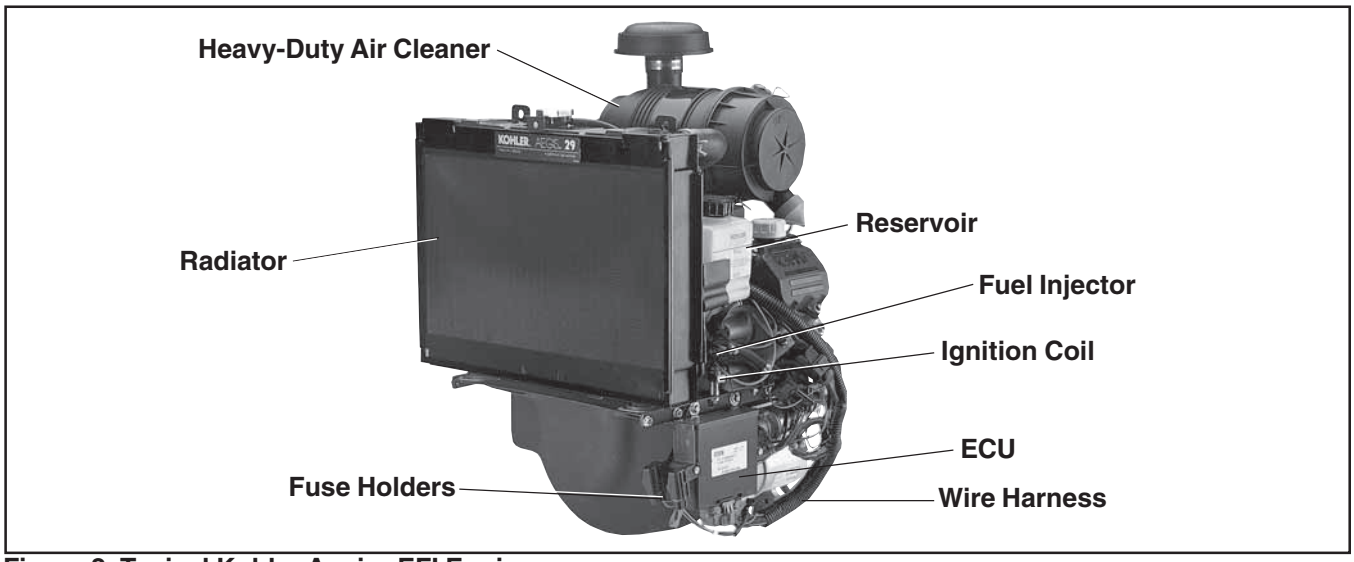

Figure 2. Typical Kohler Aegis® EFI Engine.

Oil Recommendations

Using the proper type and weight of oil in the crankcase is extremely important. So is checking oil daily and changing oil regularly. Failure to use the correct oil, or using dirty oil, causes premature engine wear and failure.

Oil Type

Use high quality detergent oil of **API (American Petroleum Institute) service class SG, SH, SJ or higher**. Synthetic oils may be used. Select the viscosity based on the air temperature at the time of operation as shown in the following table.

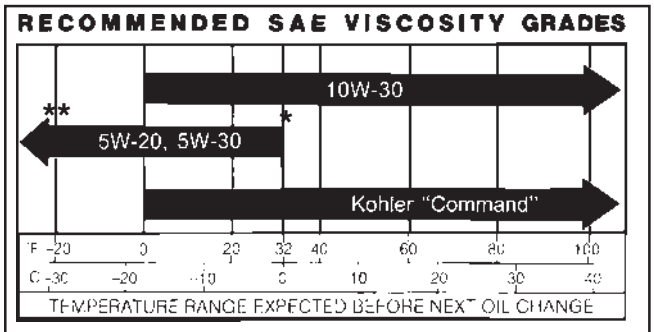

*Use of synthetic oil having 5W-20 or 5W-30 rating is acceptable, up to 4°C (40°F).

**Synthetic oils will provide better starting in extreme cold below 23°C (-10°F).

Figure 3. Viscosity Grades Table.

NOTE: Using other than service class SG, SH, SJ or higher oil or extending oil change intervals longer than recommended can cause engine damage.

NOTE: Synthetic oils meeting the listed classifications may be used with oil changes performed at the recommended intervals. However to allow piston rings to properly seat, a new or rebuilt engine should be operated for at least 50 hours using standard petroleum based oil before switching to synthetic oil.

A logo or symbol on oil containers identifies the API service class and SAE viscosity grade. See Figure 4.

Figure 4. Oil Container Logo.

Refer to "Maintenance Instructions" beginning on page 8 for detailed oil check, oil change, and oil filter change procedures.

Fuel Recommendations

WARNING: Explosive Fuel!
Gasoline is extremely flammable and its vapors can explode if ignited. Store gasoline only in approved containers, in well ventilated, unoccupied buildings, away from sparks or flames. Do not fill the fuel tank while the engine is hot or running, since spilled fuel could ignite if it comes in contact with hot parts or sparks from ignition. Do not start the engine near spilled fuel. Never use gasoline as a cleaning agent.

General Recommendations
Purchase gasoline in small quantities and store in clean, approved containers. A container with a capacity of 2 gallons or less with a pouring spout is recommended. Such a container is easier to handle and helps eliminate spillage during refueling.

Do not use gasoline left over from the previous season, to minimize gum deposits in your fuel system and to insure easy starting.

Do not add oil to the gasoline. Do not overfill the fuel tank. Leave room for the fuel to expand.

Fuel Type
For best results use only clean, fresh, **unleaded** gasoline with the pump sticker octane rating of 87 or higher. In countries using the Research method, it should be 90 octane minimum.

Unleaded gasoline is recommended as it leaves less combustion chamber deposits and reduces harmful exhaust emissions. Leaded gasoline is not recommended and **must not** be used on EFI engines, or on other models where exhaust emissions are regulated.

Gasoline/Alcohol blends
Gasohol (up to 10% ethyl alcohol, 90% unleaded gasoline by volume) is approved as a fuel for Kohler engines. Other gasoline/alcohol blends are not approved.

Gasoline/Ether blends
Methyl Tertiary Butyl Ether (MTBE) and unleaded gasoline blends (up to a maximum of 15% MTBE by volume) are approved as a fuel for Kohler engines. Other gasoline/ether blends are not approved.

Coolant Recommendations

Use equal parts of ethylene glycol (anti-freeze) and water only. Distilled or deionized water is recommended, especially in areas where the water contains a high mineral content. Propylene glycol based anti-freeze is **not** recommended.

This mixture will provide protection from -37°C (-34°F) to 108°C (226°F). For protection and use outside the indicated temperature limits, follow the anti-freeze manufacturers instructions on the container, but do not exceed 70% anti-freeze.

DO NOT use anti-freeze with stop-leak additive(s), or put any other additives in the cooling system.

Engine Identification Numbers

When ordering parts, or in any communication involving an engine, always give the **Model, Specification, and Serial Numbers** of the engine.

The engine identification numbers appear on a decal, affixed to the engine. The primary location is on the side of the flywheel cover. Placement may vary due to OEM requirements and specific options involved.

Record your engine identification numbers on the identification label (Figure 5) for future reference.

For Models LH630, LH640, LH685, LH690

KOHLER

IMPORTANT ENGINE INFORMATION
THIS ENGINE MEETS U.S. EPA AND CA 2005 AND LATER AND EC STAGE II (SN:4) EMISSION REGS FOR SI SMALL OFF–ROAD ENGINES

FAMILY
TYPE APP
DISPL. (CC)
MODEL NO.
SPEC. NO.
SERIAL NO.
BUILD DATE
OEM PROD. NO.

EMISSION COMPLIANCE PERIOD:
EPA: CARB:
CERTIFIED ON:
REFER TO OWNER'S MANUAL FOR HP RATING, SAFETY, MAINTENANCE AND ADJUSTMENTS
1-800-544-2444 www.kohlerengines.com
KOHLER CO. KOHLER, WISCONSIN USA

For Models LH755 and LH775

KOHLER

IMPORTANT ENGINE INFORMATION
THIS ENGINE MEETS EMISSION REGS FOR U.S. EPA 2005 AND LATER AND EC STAGE II (SN:4) SI SMALL OFF-ROAD ENGINES AND CA 2005 AND LATER LSI ENGINES

FAMILY
TYPE APP
DISPL. (CC)
MODEL NO.
SPEC. NO.
SERIAL NO.
BUILD DATE
OEM PROD. NO.

EMISSION COMPLIANCE PERIOD:
EPA: CARB:
CERTIFIED ON:
REFER TO OWNER'S MANUAL FOR HP RATING, SAFETY, MAINTENANCE AND ADJUSTMENTS
1-800-544-2444 www.kohlerengines.com
KOHLER CO. KOHLER, WISCONSIN USA

Figure 5. Engine Identification Label.

The Emission Compliance Period referred to on the Emission Control or Air Index label indicates the number of operating hours for which the engine has been shown to meet Federal and CARB emission requirements. The following table provides the Engine Compliance Period (in hours) associated with the category descriptor found on the certification label.

Emission Compliance Period (Hours)

EPA	Category C 250 Hours	Category B 500 Hours	Category A 1000 Hours
CARB	Moderate 125 Hours	Intermediate 250 Hours	Extended 500* Hours

*Extended hours for Models LH755 and LH775 is 1000.

Refer to certification label for engine displacement.

Exhaust Emission Control System for models LH630, LH640, LH685, LH690 and LH755 is EM. Exhaust Emission Control System for model LH775 is EM, O2S, ECM, MFI.

Model Designation

Model LH690 for example: L designates liquid cooled, H designates horizontal crankshaft, and 690 is the model designation. A letter suffix designates a specific version as follows:

Suffix	Designates
S	Electric Start

Operating Instructions

Also read the operating instructions of the equipment this engine powers.

Pre-Start Checklist

- Check oil level. Add oil if low. Do not overfill.
- Check coolant level. Add coolant if low.
- Check fuel level. Add fuel if low.
- Check radiator, cooling air intake areas and external surfaces of engine. Make sure they are clean and unobstructed.
- Check that the air cleaner components and all shrouds, equipment covers, and guards are in place and securely fastened.
- Check that any clutches or transmissions are disengaged or placed in neutral. This is especially important on equipment with hydrostatic drive. The shift lever must be exactly in neutral to prevent resistance which could keep the engine from starting.

WARNING: Lethal Exhaust Gases!
Engine exhaust gases contain poisonous carbon monoxide. Carbon monoxide is odorless, colorless, and can cause death if inhaled. Avoid inhaling exhaust fumes, and never run the engine in a closed building or confined area.

Cold Weather Starting Hints

1. The cooling system must be filled with coolant capable of providing proper protection against freezing at the lowest temperature expected (see ‘‘Coolant Recommendations’’ on page 5).
2. Be sure to use the proper oil for the temperature expected. See Figure 2 on page 4.

3. Declutch all possible external loads.

4. A warm battery has much more starting capacity than a cold battery.

5. Use fresh winter grade fuel. NOTE: Winter grade gasoline has higher volatility to improve starting. Do not use gasoline left over from summer.

Starting

1. Place the throttle control **midway** between the **"slow"** and **"fast"** positions. Place the choke control (non-EFI engines only) into the **"on"** position.

2. Start the engine by activating the key switch. Release the switch as soon as the engine starts.

   EFI Engines Only – Initial Starting or After Running out of Fuel (Dry System)
   a. Turn the key switch to the **"on"** position for one minute. Allow the fuel pump to cycle and prime the system. Turn the key switch **"off"**.

   b. Turn the key switch to the **"start"** position, crank and start engine.

   c. If the engine fails to start, repeat steps "a" and "b". If the engine does not start after two priming intervals, contact your Kohler Engine Service Dealer for further assistance.

   NOTE: Do not crank the engine continuously for more than 10 seconds at a time. If the engine does not start, allow a 60 second cool down period between starting attempts. Failure to follow these guidelines can burn out the starter motor.

   NOTE: Upon start-up, a metallic ticking may occur. This is caused by hydraulic lifter leakdown during storage. Run the engine for 5 minutes. The noise will normally cease in the first minute. If noise continues, run the engine at mid-throttle for 20 minutes. If noise persists, take the engine to your local Kohler Service outlet.

   NOTE: If the engine develops sufficient speed to disengage the starter but does not keep running (a false start), engine rotation must be allowed to come to a complete stop before attempting to restart the engine. If the starter is engaged while the flywheel is rotating, the starter pinion and flywheel ring gear may clash resulting in damage to the starter.

   If the starter does not turn the engine over, shut off starter immediately. Do not make further attempts to start the engine until the condition is corrected. Do not jump start using another battery (refer to "Battery" on page 7). See your Kohler Engine Service Dealer for trouble analysis.

Carbureted Engines Only:

3. **For a Cold Engine –** Gradually return the choke control to the **"off"** position after the engine starts and warms up.

   The engine/equipment may be operated during the warm-up period, but it may be necessary to leave the choke partially on until the engine warms up.

4. **For a Warm Engine –** Return choke to **"off"** position as soon as engine starts.

Stopping

1. Remove the load by disengaging all PTO driven attachments.

2. **For Carbureted Engines Without A Shutdown Solenoid:** Move the throttle to the **"slow"** or **"low"** idle position. Allow the engine to run at idle for 30-60 seconds; then stop the engine.

   For Carbureted Engines Equipped With A Shutdown Solenoid: Position the throttle control somewhere between half and full throttle; then stop the engine.

   For EFI Engines: Move the throttle to the "slow" or "idle" position; turn key **"off"** to stop engine.

Battery

A 12 volt battery is normally used. Refer to the operating instructions of the equipment this engine powers for specific battery requirements.

If the battery charge is not sufficient to crank the engine, recharge the battery (see page 15).

Operating

Angle of Operation

This engine will operate continuously at angles up to 20°. Check oil level to assure crankcase oil level is at the "F" mark on the dipstick.

Refer to the operating instructions of the equipment this engine powers. Because of equipment design or application, there may be more stringent restrictions regarding the angle of operation.

NOTE: Do not operate this engine continuously at angles exceeding 20° in any direction. Engine damage could result from insufficient lubrication.

Cooling

NOTE: If debris builds up on the radiator, cooling system, or other external areas, stop the engine immediately and clean. Operating the engine with blocked or dirty cooling system areas can cause extensive damage due to overheating. See "Clean Air Intake/Cooling Area", page 14.

High Temperature Sensor

Some engines are equipped with a high temperature sensor mounted in the cooling system. If the safe operating temperature is exceeded, it will either shut off the engine or activate a warning signal, depending on the application.

If the warning light illuminates or engine kills indicating excessive operating temperatures:

1. Make sure all air intake and cooling surfaces are clean and free of debris.

2. After engine has sufficiently cooled, check the coolant level in system to make sure it is not low. See "Checking Coolant Level", page 10.

3. Check the system for external leaks.

4. If the cause is none of the above or cannot be identified, contact an Authorized Kohler Engine Dealer for appropriate diagnosis and correction.

WARNING: Hot Parts!

Engine components can get extremely hot from operation. To prevent severe burns, do not touch these areas while the engine is running, or immediately after it is turned off. Never operate the engine with heat shields or guards removed.

Engine Speed

NOTE: Do not tamper with the governor setting to increase the maximum engine speed. Overspeed is hazardous and will void the engine warranty. The maximum allowable high idle speed for these engines is 3750 RPM.

Maintenance Instructions

Maintenance, repair, or replacement of the emission control devices and systems, which are being done at the customers expense, may be performed by any non-road engine repair establishment or individual. Warranty repairs must be performed by an authorized Kohler service outlet.

WARNING: Accidental Starts!

Disabling engine. Accidental starting can cause severe injury or death. *Before working on the engine or equipment, disable the engine as follows: 1) Disconnect the spark plug lead(s). 2) Disconnect negative (-) battery cable from battery.*

Maintenance Schedule

These required maintenance procedures should be performed at the frequency stated in the table. They should also be included as part of any seasonal tune-up.

Frequency	Maintenance Required
Daily or Before Starting Engine	• Fill fuel tank. • Check oil level. • Check coolant level. • Check air cleaner for dirty[1], loose, or damaged parts. • Check air intake screen, radiator, and cooling areas, clean as necessary[1].
Every 100 Hours	• Clean and check cooling areas[2].
Annually or Every 200 Hours	• Change oil and oil filter (more frequently under severe conditions). • Check spark plug condition and gap. • Replace fuel filter (carbureted engines).
Every 250 Hours	• Replace air cleaner element and check inner element[1].
Annually or Every 500 Hours	• Replace spark plugs.
Every 2 Years or Every 1000 Hours	• Change engine coolant.
Every 1500 Hours	• Replace fuel filter[1] (EFI engines),

[1]Perform these maintenance procedures more frequently under extremely dusty, dirty conditions.

[2]Cleanout Kits 25 755 20-S (black) or 25 755 21-S (gold) allow cooling areas to be cleaned without removing shrouds.

Check Oil Level

The importance of checking and maintaining the proper oil level in the crankcase cannot be overemphasized. Check oil **BEFORE EACH USE** as follows:

1. Make sure the engine is stopped, level, and is cool so the oil has had time to drain into the sump.

2. To keep dirt, debris, etc., out of the engine, clean the area around the dipstick before removing it.

3. Remove the dipstick; wipe oil off. Reinsert the dipstick into the tube and press all the way down. See Figure 6.

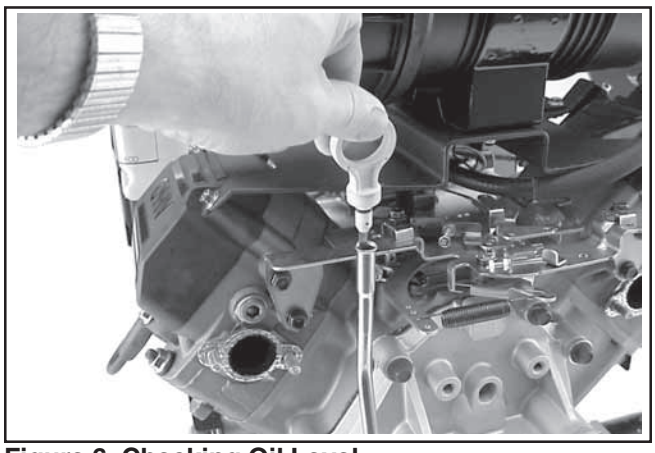

Figure 6. Checking Oil Level.

4. Pull the dipstick out and check the oil level.

   The oil level should be up to, but not over, the “F” mark on the dipstick. See Figure 7.

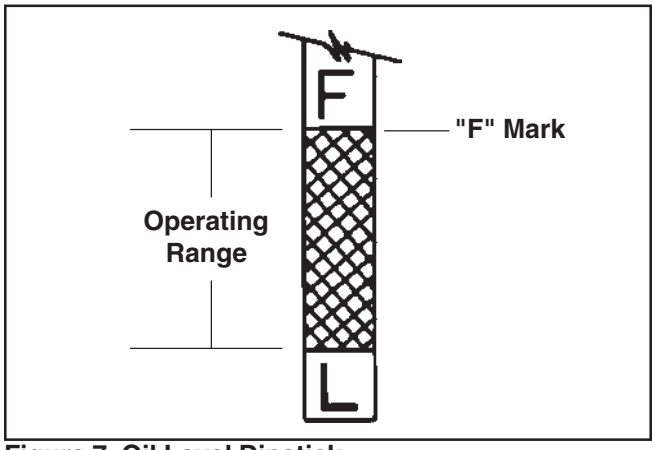

Figure 7. Oil Level Dipstick.

5. If the level is low, add oil of the proper type, up to the “F” mark on the dipstick. (Refer to “Oil Type” on page 4.) Always check the level with the dipstick before adding more oil.

NOTE: To prevent extensive engine wear or damage, always maintain the proper oil level in the crankcase. Never operate the engine with the oil level below the “L” mark or over the “F” mark on the dipstick.

Oil Sentry™

Some engines are equipped with an optional Oil Sentry™ oil pressure switch monitor. If the oil pressure decreases below an acceptable level, the Oil Sentry™ will either shut off the engine or activate a warning signal, depending on the application.

NOTE: Make sure the oil level is checked **BEFORE EACH USE** and is maintained up to the “F” mark on the dipstick. This includes engines equipped with Oil Sentry™.

Change Oil and Filter

Change the oil and oil filter **every 200 hours or annually**, whichever comes first (more often under severe conditions). Refill with service class SG, SH, SJ or higher oil, as specified in the ‘‘Viscosity Grades’’ table (Figure 3) on page 4. Always use a genuine Kohler oil filter. Use chart below to determine part number to order.

Oil Filter Part No.	Length
12 050 01-S	2-1/2"
52 050 02-S	3-3/8"

Change the oil while the engine is still warm. The oil will flow more freely and carry away more impurities. Make sure the engine is level when filling, checking, or changing the oil.

Change the oil and oil filter as follows (see Figure 8):

1. To keep dirt, debris, etc., out of the engine, clean the area around the oil fill cap before removing it.

2. Remove one of the oil drain plugs and the oil fill cap. Be sure to allow ample time for complete drainage.

3. Before removing the oil filter, clean the area around the oil filter to keep dirt and debris out of the engine. Remove the old filter and wipe off the filter adapter with a clean cloth.

4. Reinstall the drain plug. Make sure it is tightened to **13.6 N·m (10 ft. lb.)** torque.

5. Place a new replacement filter in a shallow pan with the open end up. Pour new oil, of the proper type, in through the threaded center hole. Stop pouring when the oil reaches the bottom of the threads. Allow a minute or two for the oil to be absorbed by the filter material.

6. Apply a thin film of clean oil to the rubber gasket on the new filter.

7. Install the new oil filter to the filter adapter. Hand tighten the filter (clockwise) until the rubber gasket contacts the adapter, then tighten the filter an additional **2/3 to 1 turn**.

8. Fill the crankcase with new oil of the proper type, to the "F" mark on the dipstick. Refer to "Oil Type" and "Check Oil Level" on pages 4 and 9. Always check the level with the dipstick before adding more oil.

9. Reinstall the oil fill cap and tighten securely by turning to the right.

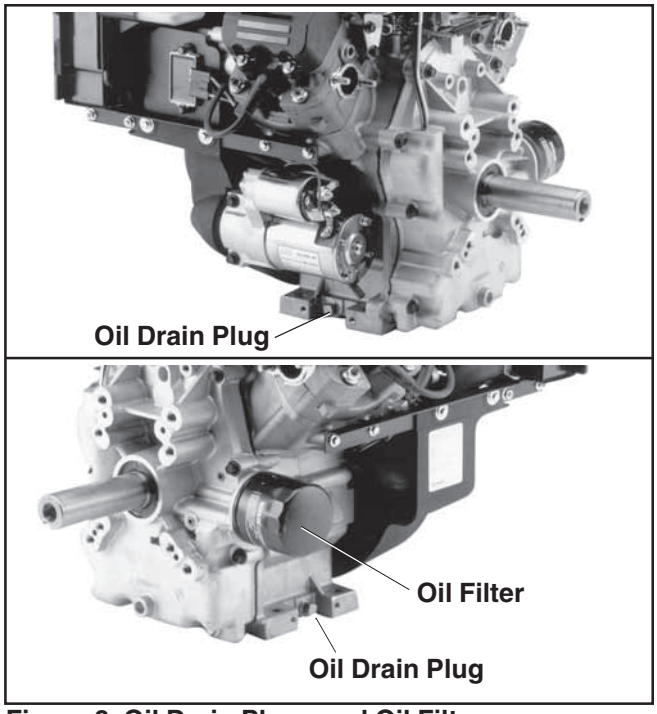

Figure 8. Oil Drain Plugs and Oil Filter.

Cooling System Maintenance and Service

Important service notes:

- Do not operate the engine without coolant in the system.
- Do not remove the radiator cap when hot. Engine coolant is hot and under pressure and can cause severe burns.
- To prevent engine overheating and damage, use the recommended anti-freeze mixture in the cooling system.
- To prevent engine damage, do not pour cold water into a hot engine.
- Cooling system capacity is approximately 2 L (2.18 qt.).
- To prevent engine damage, do not use anti-freeze with stop-leak additive(s) or put other additives in the cooling systems.

Maintenance

This engine is liquid-cooled, circulating a mixture of ethylene glycol and water for dependable operation. A pump is used to circulate the coolant through the system and radiator. A thermostat contained in the system assures automatic temperature control and rapid warm-up. Maintaining the correct coolant level and cleaning any debris accumulation from the inlet screen and radiator surfaces are critical to ensuring long life, proper system performance, and preventing overheating. Check the coolant level in the overflow reservoir, and clean away any debris accumulation daily or before each use. At the same time, inspect the hoses and all connections for signs of leakage.

Servicing

Engine coolant should be changed **every 2 years or every 1000 hours, whichever comes first**. When changing the engine coolant, the system should also be flushed to remove any contaminants left behind during draining. Following are recommended procedures for checking, draining, flushing, and filling the cooling system.

Checking Coolant Level

The coolant level should be checked at the overflow reservoir, located within the formed supports of the fan shroud. See Figure 9.

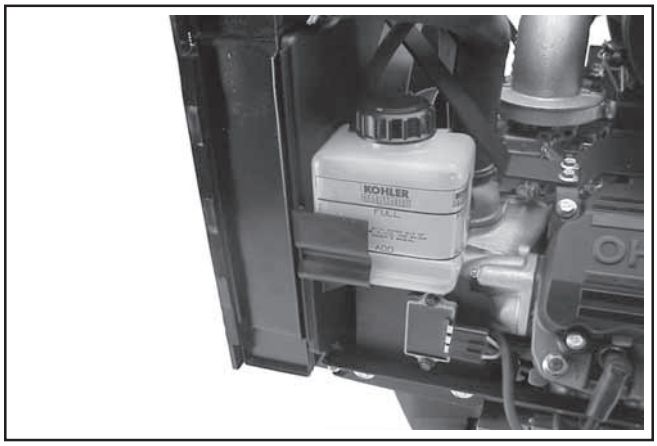

Figure 9. Overflow Reservoir Location.

1. Check the coolant level in the overflow reservoir. Coolant level should be between the "FULL" and "ADD" marks on the reservoir. See Figure 10. **Do not** operate the engine with the coolant level below the "ADD" mark.

   Add coolant to the overflow reservoir as required. Use equal parts of ethylene glycol and water only (distilled or deionized water is recommended).

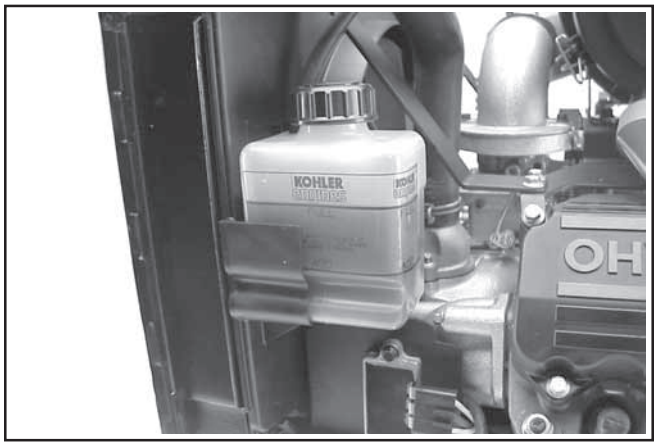

Figure 10. Coolant Levels on Reservoir.

Draining Cooling System

1. Stop the engine and allow it to cool sufficiently.

2. Check if the radiator is cool to the touch. Slowly loosen the radiator cap to the first stop and allow any pressure to bleed off. Then loosen it fully and remove it. Loosen/remove radiator drain plug and allow coolant to drain. See Figure 11.

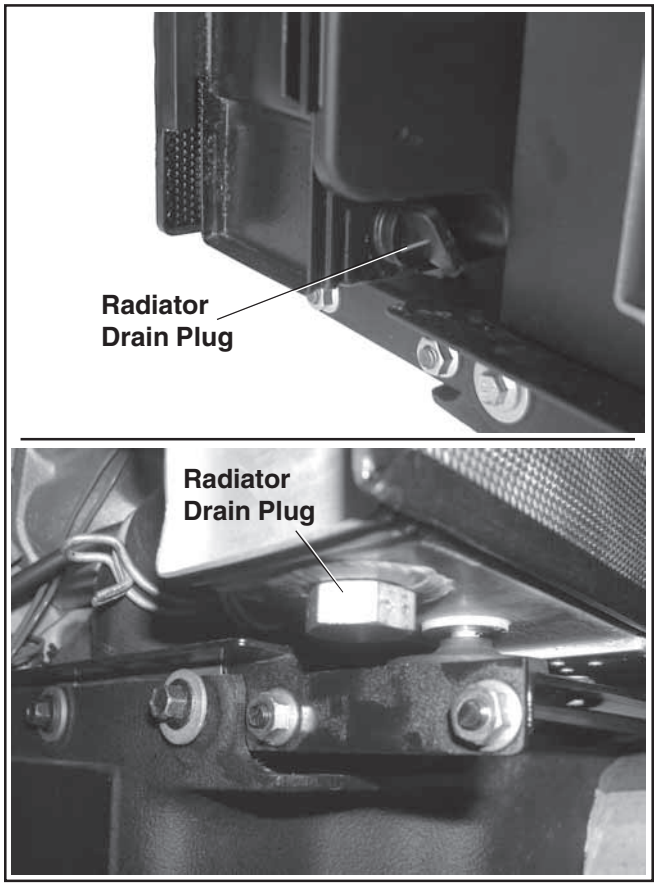

Figure 11. Radiator Drain Plug Location.

3. If equipped, remove the coolant drain plugs located on each side of the engine block. See Figure 11. Drain the coolant into a suitable container. After the coolant has drained completely, apply pipe sealant with Teflon® (Loctite® No. 592 or equivalent), to the threads and reinstall the plugs. Torque the two plugs to **13.5 N·m (120 in. lb.)**.

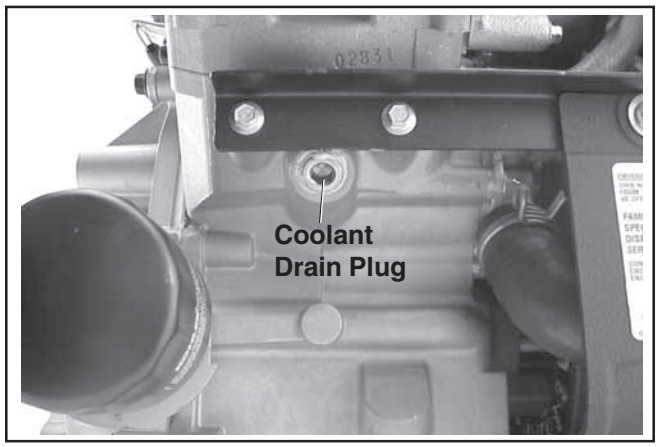

Figure 12. Coolant Drain Plug (Some Models).

4. Remove overflow hose from reservoir. Unhook inboard retainer and slide reservoir out of supports. See Figure 13. Pour out the contents and wash or clean as required. Dispose of all the old coolant properly according to local regulations.

Figure 13. Removing Reservoir.

5. Reinstall the reservoir cap. Do not kink/pinch the hose.

6. Flush the cooling system (see ‘‘Flushing Cooling System’’).

Flushing Cooling System

With system properly drained:

1. Fill the cooling system with clean water and a cooling system cleaner recommended for aluminum engines. Follow the directions on the container.

2. Reinstall and tighten the radiator cap.

3. Start and run the engine for five minutes, or until it reaches operating temperature. Stop the engine and allow it to cool.

4. Drain the cooling system (Refer to "Draining Cooling Systems).

5. Fill the cooling system (see ‘‘Filling Cooling System’’).

Filling Cooling System

1. Check the condition of cooling system hoses, clamps, and associated components. Replace as required.

2. Mix equal parts of ethylene glycol anti-freeze and distilled or deionized water (see ‘‘Coolant Recommendations’’ on page 5). For extremely cold temperature applications or protection outside the limits listed in the ‘‘Coolant Recommendations’’ Section, refer to the anti-freeze manufacturers instructions on the container, but do not exceed 70% anti-freeze.

3. Fill the radiator with the coolant mixture. Allow coolant to drain into the lower areas. Fill the overflow reservoir to a level between the ‘‘FULL’’ and ‘‘ADD’’ marks. See Figure 9. Reinstall the radiator and reservoir caps.

4. Start and run the engine for five minutes. Stop the engine and allow to cool.

5. Recheck the coolant level in the reservoir. Coolant level should be between the ‘‘FULL’’ and ‘‘ADD’’ marks. Add coolant to reservoir if required. See Figure 9.

Air Cleaner Element and Inner Element Service

This engine is equipped with a heavy-duty high density paper air cleaner element surrounding a canister style inner element. Cleaning is not recommended, each element should be replaced when dirty. See Figure 14.

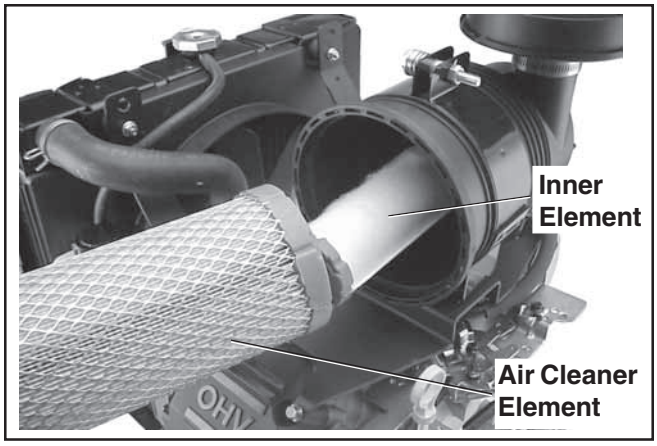

Figure 14. Air Cleaner Element and Inner Element.

The air cleaner system should be inspected **daily or before starting the engine**, for a buildup of dirt and debris, or for any damaged or loose components. Keep the system clean and properly secured. Replace any damaged air cleaner comments. **Do not** operate the engine without the complete air cleaner system installed and properly secured.

NOTE: Operating the engine with loose, damaged, or missing air intake components can allow unfiltered air into the engine, causing premature wear and failure.

To Service

Every **250 hours** of operation (more often under extremely dusty or dirty conditions), replace the paper element and check the inner element. Follow these steps.

1. Unhook the two retaining clips and remove the end cap from the air cleaner housing. See Figure 15.

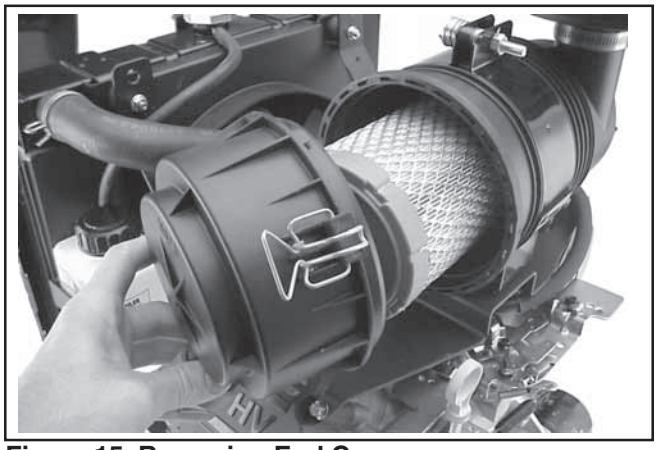

Figure 15. Removing End Cap.

2. Pull the air cleaner element out of the housing. See Figure 16.

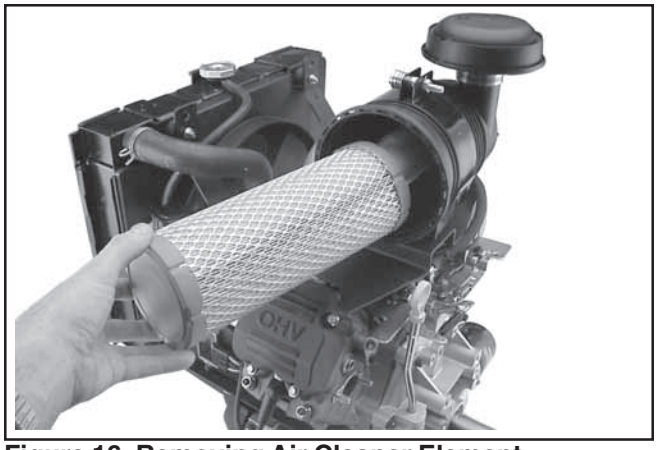

Figure 16. Removing Air Cleaner Element.

3. After the main element is removed, check the condition of the inner element. It should be replaced whenever it appears dirty, typically every other time the main element is replaced. Clean the area around the base of the inner element before removing it, so dirt does not get into the engine. See Figure 17.

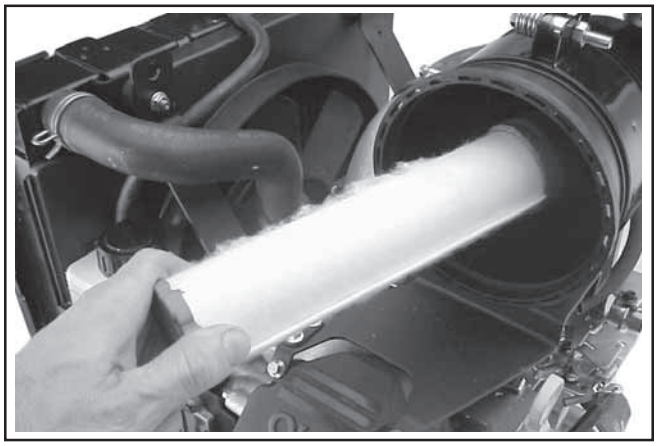

Figure 17. Removing Inner Element.

4. **Do not** wash the paper element and inner element or use pressurized air, this will damaged the elements. Replace dirty, bent, or damaged elements with new genuine Kohler elements as required. Handle new elements carefully; do not use if the sealing surfaces are bent or damaged.

5. Check all parts for wear, cracks, or damage. Replace any damaged components.

6. Install the new inner element, Kohler Part No. **25 083 04-S** followed by the outer element, Kohler Part No. **25 083 01-S**. Slide each fully into place in the air cleaner housing.

7. Reinstall the end cap so the dust ejector valve is down and secure with the two retaining clips. See Figure 18.

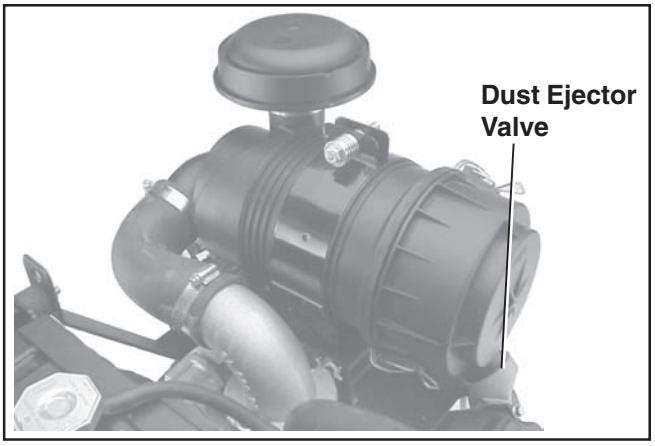

Figure 18. Air Cleaner Assembly.

Air Intake System and Air Cleaner Components

Air Cleaner Housing/End Cap Assembly

Make sure air cleaner housing including the dust ejector valve and the end cap is in good condition and not cracked. The two retainer clips should positively lock when cap is installed.

Air Cleaner Hose

Inspect the air cleaner hose to make sure it is not cracked, split or damaged. Check that the air cleaner hose is securely clamped to both the air cleaner outlet and the inlet elbow on the carburetor.

Air Cleaner Mounting Base

Make sure the base is securely fastened to the upper valve cover screw locations and the screws securing the clamp bracket for the air cleaner housing are properly installed and tight.

Breather Tube

Make sure the tube is in good condition and is properly secured to both the breather cover and elbow adapter.

Cooling Fan Assembly, Belt, and Drive Pulleys

The cooling fan assembly, used to draw the air in and across the radiator, is attached to a hub and pulley assembly with sealed ball bearings. It is belt driven by a lower split pulley attached to the flywheel and requires very little service or maintenance. **DO NOT operate the engine without the fan and cooling system functioning properly, or engine damage will occur**. See Figure 19.

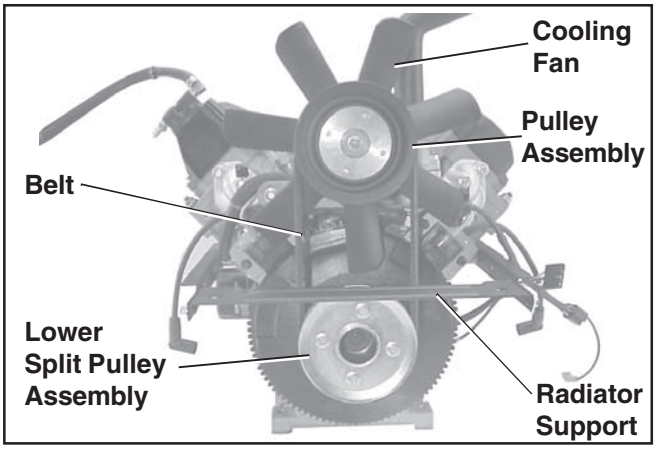

Figure 19. Cooling System Belt Drive (Cover and Radiator Removed For Clarity).

1. Inspect the fan for any cracks, damaged/missing fan blades, and secure mounting.

2. The bearings, within the bearing carrier in the hub of the pulley, should rotate smoothly, without roughness, binding, or play/wobble.

3. The v-groove of each pulley (upper and lower) should not be bent, nicked, or damaged. Pulley mounting areas and lower pulley shims should be free of any cracks or elongation. See Figure 20.

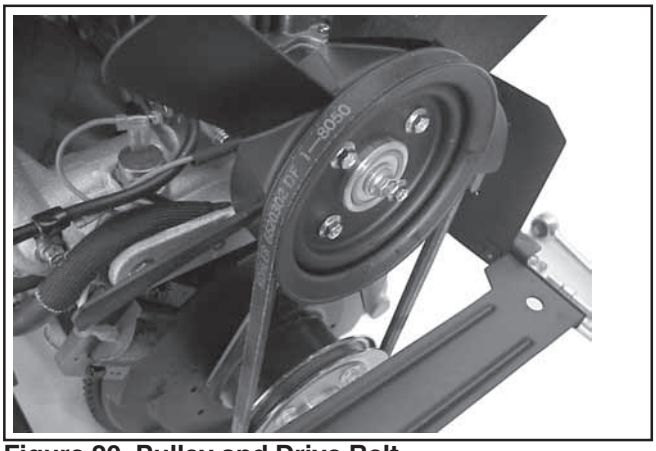

Figure 20. Pulley and Drive Belt.

4. The drive belt is designed and constructed for this application. **Do not use a substitute belt**. Check the overall condition of the belt. If belt is cracked, damaged, or adequate tension does not exist, have necessary servicing performed by an authorized Kohler Engine Service Dealer.

Clean Air Intake/Cooling Areas

To ensure proper air circulation and cooling, make sure the serviceable screen, radiator cooling fins, fan assembly and external surfaces of the engine are kept clean **at all times**.

Every **100 hours** of operation (more often under extremely dusty, dirty conditions), thoroughly clean the radiator cooling fins, fan assembly, intake system and external surfaces of the engine. Make sure all parts are reinstalled before starting the engine.

Clean the cooling fins of the screen and radiator with a soft brush or blow out, using clean, compressed air. See Figure 20. **Do not** use a high pressure washer, to avoid damaging the cooling fins.

NOTE: Operating the engine with a restricted air intake screen or radiator, damaged/broken fan assembly, or missing fan shroud will cause engine damage due to overheating.

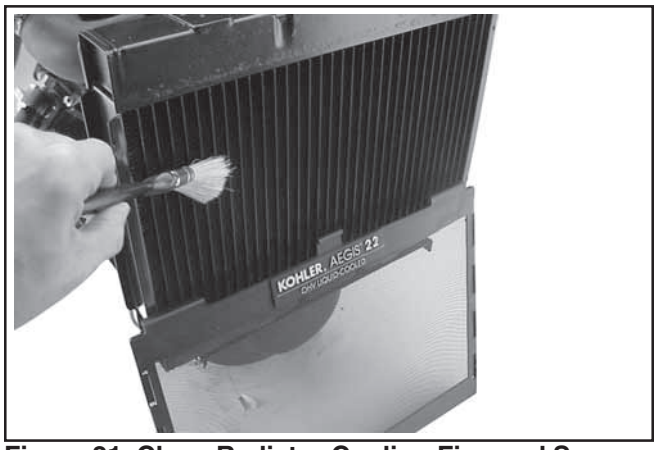

Figure 21. Clean Radiator Cooling Fins and Screen.

Ignition System

Carbureted Engines - Use an electronic Capacitive Discharge (CD) ignition system. Other than periodically checking/replacing the spark plugs, no maintenance, timing, or adjustments are necessary or possible with this system.

EFI Engines - Incorporate a computer-controlled battery ignition system with individual coils. Other than periodically checking/replacing the spark plugs, no maintenance, timing, or adjustments are necessary or possible with this system.

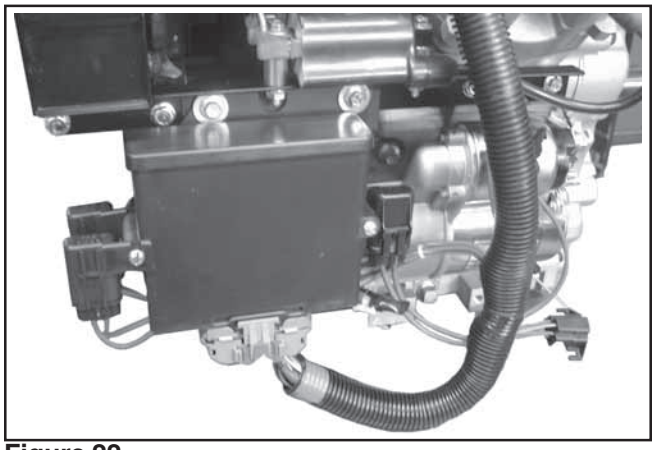

Figure 22.

In the event starting problems should occur, which are not corrected by replacing the spark plugs, see your Kohler Engine Service Dealer for trouble analysis.

Check Spark Plugs

Annually or every **200 hours** of operation (whichever comes first), remove the spark plugs, check condition, and reset the gap or replace with new plugs as necessary. Every **500 hours** of operation replace the spark plugs. The standard spark plug is a Champion® RC14YC (Kohler Part No. **66 132 01-S**). Equivalent alternate brand plugs can also be used.

1. Before removing the spark plug, clean the area around the base of the plug to keep dirt and debris out of the engine.

2. Remove the plug and check its condition. Replace the plug if worn or reuse is questionable.

   NOTE: Do not clean the spark plug in a machine using abrasive grit. Some grit could remain in the spark plug and enter the engine, causing extensive wear and damage.

3. Check the gap using a wire feeler gauge. Adjust the gap to **0.76 mm (0.030 in.)** by carefully bending the ground electrode. See Figure 23.

4. Reinstall the spark plug into the cylinder head. Torque the spark plug to **24.4-29.8 N·m (18-22 ft. lb.)**.

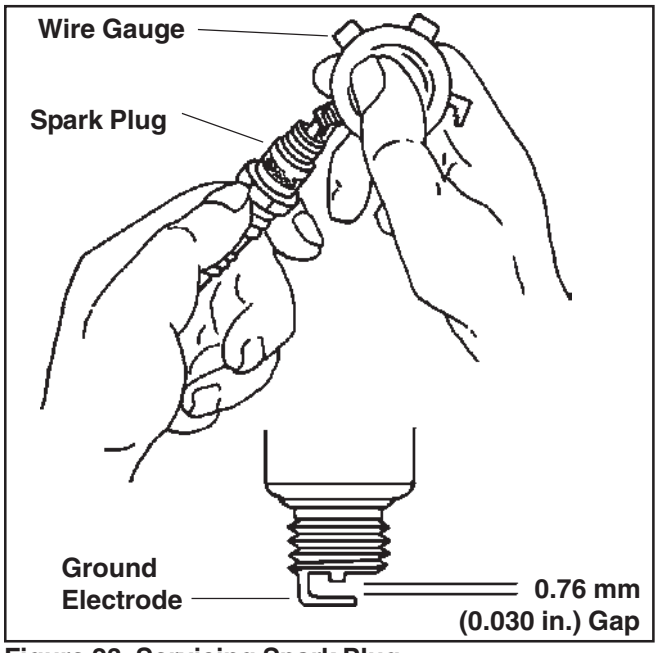

Figure 23. Servicing Spark Plug.

Battery Charging

WARNING: Explosive Gas!

Batteries produce explosive hydrogen gas while being charged. To prevent a fire or explosion, charge batteries only in well ventilated areas. Keep sparks, open flames, and other sources of ignition away from the battery at all times. Keep batteries out of the reach of children. Remove all jewelry when servicing batteries.

Before disconnecting the negative (-) ground cable, make sure all switches are OFF. If ON, a spark will occur at the ground cable terminal which could cause an explosion if hydrogen gas or gasoline vapors are present.

NOTE: Do not apply 12 volt DC to kill terminal of ignition module.

Fuel Filter

Carbureted Engines: Most engines are equipped with an in-line fuel filter. Periodically inspect the filter and replace every **200 operating hours**. *Use a genuine Kohler filter*, Part No. **24 050 10-S**.

EFI Engines: A special, high volume, high pressure filter with greater filtration capabilities and internal surface area is used. See Figure 24.

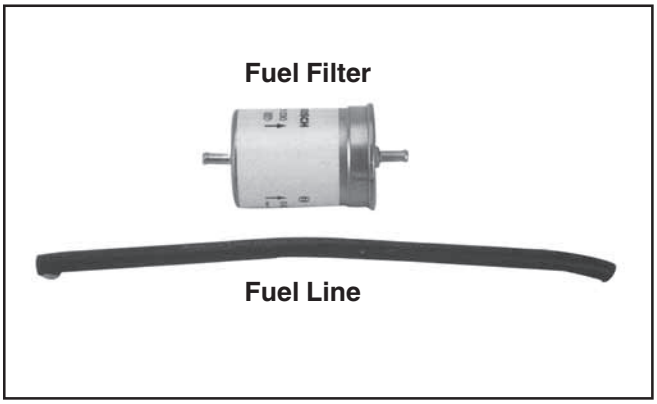

Figure 24. EFI Fuel Filter and Line.

Replacement is recommended **every 1500 hours**, or more frequently under extremely dusty or dirty conditions. When replacement is necessary, always use genuine Kohler parts.

Fuel Line

EFI Engines: A special fuel line, capable of withstanding the high pressure of the EFI fuel system, is used (must meet SAE R9 specifications). See Figure 24. If fuel line must be replaced, see your Kohler Engine Service Dealer.

Carburetor Troubleshooting and Adjustments

In compliance with the government emission standards, the carburetor is calibrated to deliver the correct fuel-to-air mixture to the engine under all operating conditions. The carburetor cannot be adjusted, except for low idle speed (RPM). Carburetor servicing is to be performed by an authorized Kohler Engine Service Dealer only. See Figure 25.

NOTE: To ensure correct engine operating at altitudes above 1525 meters (5000ft.), it may be necessary to have an authorized Kohler dealer install a special high-altitude jet kit in the carburetor. If a high-altitude kit has been installed, the engine must be reconverted to the original jet size, before it is operated at lower altitudes, or overheating and engine damage can result.

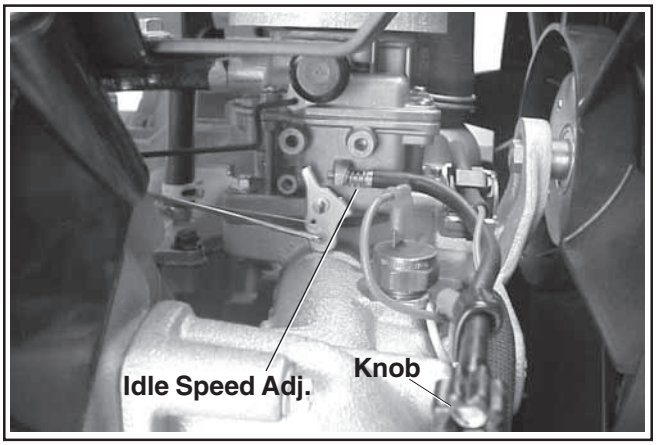

Figure 25. Carburetor and Idle Speed Adjustment.

Troubleshooting

If engine troubles are experienced that appear to be fuel system related, check the following areas before adjusting the carburetor.

- Make sure the fuel tank is filled with clean, fresh gasoline.
- Make sure the fuel tank cap vent is not blocked and that it is operating properly.
- If the fuel tank is equipped with a shut-off valve, make sure it is open.
- If the engine is equipped with an in-line fuel filter, make sure it is clean. Replace the filter if it is dirty or restricted.
- Make sure fuel is reaching the carburetor. This includes checking the fuel lines and fuel pump for restrictions or faulty components, replace as necessary.
- Make sure cooling system is filled to the proper level.
- Make sure the air cleaner element and precleaner are clean and properly secured.
- Make sure the air intake screen, blower housing, and cooling surfaces of radiator are clean and free of dirt and debris.

If, after checking the items listed above, the engine is hard to start, runs roughly, or stalls at low idle speed, it may be necessary to adjust or service the carburetor.

Adjust Carburetor

Start the engine and run at half throttle for 5 to 10 minutes to warm up. The engine must be warm before making final settings.

Low idle speed (RPM) setting:

1. Place the throttle control into the **“idle”** or **“slow”** position. Set the low idle speed to **1200 RPM*** (± 75 RPM) by turning the low idle speed adjusting screw (cable w/knob on some models) **in or out**. Check the speed using a tachometer.

   *NOTE: The actual low idle speed depends on the application – refer to equipment manufacturers recommendations. The standard low idle speed is 1200 RPM.

2. If proper operation is not restored after adjusting the low idle speed, carburetor servicing by an authorized Kohler Engine Service Dealer may be required.

Electronic Fuel Injection (EFI) System

The EFI system is a complete, electronically-controlled fuel management system, designed to deliver a precisely controlled fuel flow under all operating conditions. The electronic control unit (ECU), the ‘‘brain’’ of the system, automatically adjusts fuel delivery and ignition timing based upon load, speed, operating temperature, and exhaust emission levels. The low idle speed is the only manual adjustment possible.

The ECU continuously monitors operation of the EFI system. If it detects a problem or fault within the system, it will illuminate the malfunction indicator light (MIL), which is mounted in view of the operator. This is a signal that normal, programmed operation has been affected, and service by an authorized Kohler Engine Dealer is required.

NOTE: The EFI system requires a rather complex wiring harness to carry the electrical signals between the sensors and the ECU. **Do not** spray water at the wiring harness or any of the electrical components, especially the ECU, as it could cause malfunction, damage, or failure.

Troubleshooting
If the MIL comes on, or the engine becomes hard to start, runs roughly, or stalls at low idle speed, initial checks should be made in the following areas:

- Make sure the fuel tank is filled with clean, fresh gasoline, and shut-off valve (if so equipped) is opened completely.
- Make sure fuel tank vent cap is not blocked and it is operating properly.
- Make sure the air cleaner element and precleaner are clean and all components are properly secured. Clean or replace as necessary.
- Make sure the proper fuel filter is being used, and it is clean and unobstructed. Replace filter **only** with genuine Kohler parts.
- Make sure all connections to sensors, ECU, and fuel injectors are properly secured.
- Make sure a good 12 volt battery is being used and is fully charged.

If these checks do not correct the problem, or the MIL remains on, further diagnosis and servicing by an authorized Kohler Engine Dealer is necessary.

Adjustment – EFI Throttle Body

Low Idle Speed (RPM) is the only adjustment that can be made. All other fuel calibrations are permanently preset and controlled by the ECU. The standard low idle speed is **1500 RPM*** (± 75 RPM).

*NOTE: The actual low idle speed depends on the application -- refer to equipment manufacturer's recommendations.

When an EFI engine is started cold, the ECU will be using internal programming for cold running, and the idle speed may vary from the manual setting. Do not attempt to perform any readjustment during this "warm-up" period.

If adjustment is to be made, the engine must be at operating temperature, air cleaner in place, and check engine light must be off (no fault codes present).

1. Start the engine and run at half throttle for 5 to 10 minutes to warm up.
2. Place the throttle control into the **"idle"** or **"slow"** position.
3. Turn the low idle speed adjusting screw in or out and check RPM with a tachometer. See Figure 26.

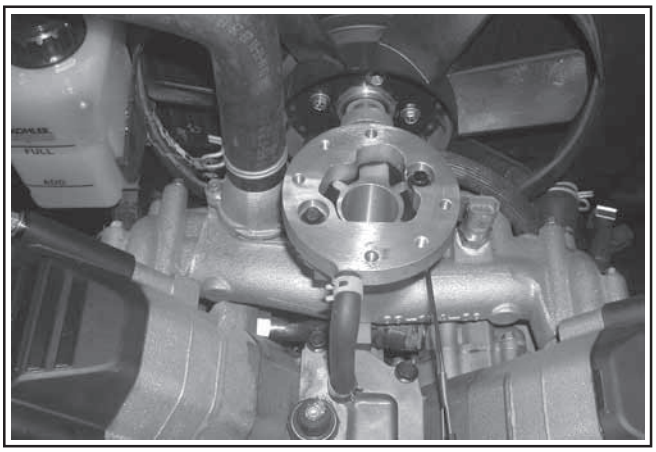

Figure 26. EFI Throttle Body Manifold.

Troubleshooting

When troubles occur, be sure to check the simple causes which, at first, may seem too obvious to be considered. For example, a starting problem could be caused by an empty fuel tank. Some common causes of engine troubles are listed in the following table.

Do not attempt to service or replace major engine components, or any items that require special timing or adjustment procedures. Have your Kohler Engine Service Dealer do this work.

Possible Cause / Problem	No Fuel	Improper Fuel	Dirt In Fuel Line/System	Dirty Grass Screen	Incorrect Oil Level	Engine Overloaded	Dirty Air Cleaner	Faulty Spark Plug
Will Not Start	•	•	•		•	•	•	•
Hard Starting	•	•	•			•	•	•
Stops Suddenly	•		•	•	•	•	•	•
Lacks Power		•	•	•	•	•	•	•
Operates Erratically		•	•	•		•	•	•
Knocks or Pings		•	•	•		•		•
Skips or Misfires		•	•	•			•	•
Backfires		•	•			•	•	•
Overheats		•	•	•	•	•	•	
High Fuel Consumption						•	•	•

Storage

If the engine will be out of service for two months or more, use the following storage procedure:

1. Clean the exterior surfaces of the radiator and engine. On EFI engines, avoid spraying water at the wiring harness or any of the electrical components.

2. Change the oil and filter while the engine is still warm from operation. See “Change Oil and Filter” on page 9.

3. The coolant (anti-freeze) mixture should be in good condition and tested to guard against freezing in cold temperatures. The recommended 50/50 mixture will normally provide protection down to temperatures of -37°C (-34°F). If storage temperatures will fall below this, the cooling system should be drained completely. A note should then be attached to the equipment and/or engine as a reminder to refill the cooling system before starting.

4. The fuel system must be completely emptied, or the gasoline must be treated with a stabilizer to prevent deterioration. If you choose to use a stabilizer, follow the manufacturers recommendations, and add the correct amount for the capacity of the fuel system. Fill the fuel tank with clean, fresh gasoline. Run the engine for 2-3 minutes to get stabilized fuel into the carburetor. Close fuel shut-off valve when unit is being stored or transported.

   To empty the system, run the engine until the tank and system are empty.

5. Remove the spark plugs. Add one tablespoon of engine oil into each spark plug hole. Install plugs, but do not connect the plug leads. Crank the engine two or three revolutions.

6. On units with EFI engines, disconnect the negative (-) battery cable or use a "battery minder" trickle charger while the unit is in storage.

7. Store the engine in a clean, dry place.

Parts Ordering

The engine Specification, Model, and Serial Numbers are required when ordering replacement parts from your Kohler Engine Service Dealer. These numbers are found on the identification plate which is affixed to the engine shrouding. Include letter suffixes if there are any. See “Engine Identification Numbers” on page 5.

Always insist on genuine Kohler parts. All genuine Kohler parts meet strict standards for fit, reliability, and performance.

Major Repair

Major repair information is available in Kohler Engine Service Manuals. However, major repair generally requires the attention of a trained mechanic and the use of special tools and equipment. Your Kohler Engine Service Dealer has the facilities, training, and genuine Kohler replacement parts necessary to perform this service. For Sales & Service assistance call 1-800-544-2444 (U.S. & Canada) or contact your Kohler Engine Dealer or Service Distributor, they're in the Yellow Pages under Engines-Gasoline.

Specifications

Model:	LH630/640	LH685/690	LH755	LH775
Bore: in. (mm)	3.03 (77)	3.15 (80)	3.3 (83)	3.3 (83)
Stroke: in. (mm)	2.64 (67)	2.64 (67)	2.7 (69)	2.7 (69)
Displacement: in^3 (cm^3)	38.1 (624)	41.1 (674)	45.6 (748)	45.6 (748)
Power (Max. @3600 RPM): HP (kW)	22* (16.4) 24* (17.9)	25* (18.6) 26* (19.4)	28* (20.9)	31* (23.1)*
Peak Torque: N·m (ft. lb.) @RPM	35.4 (48)@2200 38.3 (51.9)@2400	40.1 (54.4)@2200 42.9 (58.2)@2400	45.4 (61.6)@2800	47.7 (64.7)@2400
Compression Ratio:	8.5:1	8.5:1	8.7:1	8.7:1
Dry Weight: lb. (kg)	114 (51.7)	114 (51.7)	114 (51.7)	114 (51.7)
Coolant/Anti-Freeze: U.S. qts. (L)	Equal Parts of Water and Ethylene Glycol 2.18 (2.0)			
Lubrication:	Full Pressure w/full Flow Filter			
Oil Capacity (w/filter) - approximate, determined by oil filter used:	1.6-1.8 L (1.7-1.9 U.S. qt.)			

Exhaust Emission Control System for models LH630, LH640, LH685, LH690, and LH755 is EM.
Exhaust Emission Control System for models LH775 is EM, O2S, ECM, MFI.

*Horsepower ratings exceed Society of Automotive Engineers Small Engine Test Code J1940. Actual engine horsepower is lower and affected by, but not limited to, accessories (air cleaner, exhaust, charging, cooling, fuel pump, etc.), application, engine speed and ambient operating conditions (temperature, humidity, and altitude). Kohler reserves the right to change product specifications, designs and equipment without notice and without incurring obligation.

LIMITED 3 YEAR KOHLER AEGIS® ENGINE WARRANTY

Kohler Co. warrants to the original retail consumer that each new KOHLER AEGIS® engine sold by Kohler Co. will be free from manufacturing defects in materials or workmanship in normal residential service for a period of three (3) years from date of purchase, provided it is operated and maintained in accordance with Kohler Co.'s instructions and manuals.

Our obligation under this warranty is expressly limited, at our option, to the replacement or repair at Kohler Co., Kohler, Wisconsin 53044, or at a service facility designated by us of such parts as inspection shall disclose to have been defective.

EXCLUSIONS:
Mufflers on engines used commercially (non-residential) are warranted for one (1) year from date of purchase, except catalytic mufflers, which are warranted for two (2) years.

This warranty does not apply to defects caused by casualty or unreasonable use, including faulty repairs by others and failure to provide reasonable and necessary maintenance.

The following items are not covered by this warranty:

Engine accessories such as fuel tanks, clutches, transmissions, power-drive assemblies, and batteries, unless supplied or installed by Kohler Co. These are subject to the warranties, if any, of their manufacturers.

KOHLER CO. AND/OR THE SELLER SHALL NOT BE LIABLE FOR SPECIAL, INDIRECT, INCIDENTAL, OR CONSEQUENTIAL DAMAGES OF ANY KIND, including but not limited to labor costs or transportation charges in connection with the repair or replacement of defective parts.

IMPLIED OR STATUTORY WARRANTIES, INCLUDING WARRANTIES OF MERCHANTABILITY OR FITNESS FOR A PARTICULAR PURPOSE, ARE EXPRESSLY LIMITED TO THE DURATION OF THIS WRITTEN WARRANTY. We make no other express warranty, nor is any one authorized to make any on our behalf.

Some states do not allow limitations on how long an implied warranty lasts, or the exclusion or limitation of incidental or consequential damages, so the above limitation or exclusion may not apply to you.

This warranty gives you specific legal rights, and you may also have other rights, which vary from state to state.

TO OBTAIN WARRANTY SERVICE:
Purchaser must bring the engine to an authorized Kohler service facility. To locate the nearest facility, visit our website, www.kohlerengines.com, and click on SALES AND SERVICE to use the locator function, consult your Yellow Pages or telephone 1-800-544-2444.

ENGINE DIVISION, KOHLER CO., KOHLER, WISCONSIN 53044

KOHLER CO.
FEDERAL AND CALIFORNIA EMISSION CONTROL SYSTEMS
LIMITED WARRANTY
SMALL OFF-ROAD AND CLASS 1 LSI ENGINES

The U.S. Environmental Protection Agency (EPA), the California Air Resources Board (CARB), and Kohler Co. are pleased to explain the Federal and California Emission Control Systems Warranty on your off-road equipment engine. For California, small off-road engines produced in 1995 and later, and Class 1 LSI (Large Spark Ignited engines at or below 1.0 liter) produced in 2002 and later, must be designed, built and equipped to meet the state's stringent anti-smog standards. In other states, 1997 and later model year engines must be designed, built and equipped, to meet the U.S. EPA regulations for small non-road engines. The engine must be free from defects in materials and workmanship, which cause it to fail to conform with U.S. EPA standards for the first two years of engine use from the date of sale to the ultimate purchaser. Kohler Co. must warrant the emission control system on the engine for the period of time listed above, provided there has been no abuse, neglect or improper maintenance.

The emission control system may include parts such as the carburetor or fuel injection system, the ignition system, and catalytic converter. Also included are the hoses, belts and connectors and other emission-related assemblies.

Where a warrantable condition exists, Kohler Co. will repair the engine at no cost, including diagnosis (if the diagnostic work is performed at an authorized dealer), parts and labor.

MANUFACTURER'S WARRANTY COVERAGE
Small off-road engines produced in 1995 or later, and Class 1 LSI engines produced in 2002 and later, are warranted for two years in California. In other states, 1997 and later model year engines are warranted for two years. If any emission related part on the engine is defective, the part will be repaired or replaced by Kohler Co. free of charge.

OWNER'S WARRANTY RESPONSIBILITIES

(a) The engine owner is responsible for the performance of the required maintenance listed in the owner's manual. Kohler Co. recommends that you retain all receipts covering maintenance on the engine, but Kohler Co. cannot deny warranty solely for the lack of receipts or for your failure to assure that all scheduled maintenance was performed.

(b) Be aware, however, that Kohler Co. may deny warranty coverage if the engine or a part has failed due to abuse, neglect, improper maintenance or unapproved modifications.

(c) For warranty repairs, the engine must be presented to a Kohler Co. service center as soon as a problem exists. Call 1-800-544-2444 or access our website at: www.kohlerengines.com, for the names of the nearest service centers. The warranty repairs should be completed in a reasonable amount of time, not to exceed 30 days.

Continued on next page.

If you have any questions regarding warranty rights and responsibilities, you should contact Kohler Co. at 1-920-457-4441 and ask for an Engine Service representative.

COVERAGE

Kohler Co. warrants to the ultimate purchaser and each subsequent purchaser that the engine will be designed, built and equipped, at the time of sale, to meet all applicable regulations. Kohler Co. also warrants to the initial purchaser and each subsequent purchaser, that the engine is free from defects in materials and workmanship which cause the engine to fail to conform with applicable regulations for a period of two years.

Small off-road engines produced in 1995 or later, and Class 1 LSI engines produced in 2002 and later, are warranted for two years in California. For 1997 and later model years, EPA requires manufacturers to warrant engines for two years in all other states. These warranty periods will begin on the date the engine is purchased by the initial purchaser. If any emission related part on the engine is defective, Kohler Co. will replace the part at no cost to the owner. Kohler Co. is liable for damages to other engine components caused by the failure of a warranted part still under warranty.

Kohler Co. shall remedy warranty defects at any authorized Kohler Co. engine dealer or warranty station. Warranty repair work done at an authorized dealer or warranty station shall be free of charge to the owner if such work determines that a warranted part is defective.

Listed below are the parts covered by the Federal and California Emission Control Systems Warranty. Some parts listed below may require scheduled maintenance and are warranted up to the first scheduled replacement point for that part. The warranted parts are:

- Carburetor assembly
- Throttle body (EFI Systems)
- Catalytic muffler (if equipped)
- Fuel metering valve (if equipped)
- Crankcase breather
- Fuel pressure regulator (EFI Systems)
- Ignition module(s) with high tension lead
- Spark advance module (if equipped)
- Oxygen, speed, throttle position, and temperature sensors (if equipped)
- Electronic control unit (if equipped)
- Fuel injectors (EFI Systems)
- Air filter, fuel filter, and spark plugs (only to first scheduled replacement point)

LIMITATIONS

This Emission Control Systems Warranty shall not cover any of the following:

(a) repair or replacement required because of misuse or neglect, improper maintenance, repairs improperly performed or replacements not conforming to Kohler Co. specifications that adversely affect performance and/or durability and alterations or modifications not recommended or approved in writing by Kohler Co.,

(b) replacement of parts and other services and adjustments necessary for required maintenance at and after the first scheduled replacement point,

(c) consequential damages such as loss of time, inconvenience, loss of use of the engine or equipment, etc.,

(d) diagnosis and inspection fees that do not result in eligible warranty service being performed, and

(e) any add-on or modified part, or malfunction of authorized parts due to the use of add-on or modified parts.

MAINTENANCE AND REPAIR REQUIREMENTS

The owner is responsible for the proper use and maintenance of the engine. Kohler Co. recommends that all receipts and records covering the performance of regular maintenance be retained in case questions arise. If the engine is resold during the warranty period, the maintenance records should be transferred to each subsequent owner. Kohler Co. reserves the right to deny warranty coverage if the engine has not been properly maintained; however, Kohler Co. may not deny warranty repairs solely because of the lack of repair maintenance or failure to keep maintenance records.

Normal maintenance, replacement or repair of emission control devices and systems may be performed by any repair establishment or individual; however, **warranty repairs must be performed by a Kohler authorized service center**. Any replacement part or service that is equivalent in performance and durability may be used in non-warranty maintenance or repairs, and shall not reduce the warranty obligations of the engine manufacturer.

KOHLER ENGINES

FORM NO.:	66 590 02
ISSUED:	12/04
REVISED:	1/05
MAILED:	

LITHO IN U.S.A.

1P66 590 02

6 50531 25243 2

FOR SALES AND SERVICE INFORMATION
IN U.S. AND CANADA, CALL **1-800-544-2444**

ENGINE DIVISION, KOHLER CO., KOHLER, WISCONSIN 53044

INSTALLATION OPERATION MAINTENANCE

BLOWERS EXHAUSTERS COMPRESSORS

ROOTS™

US $3.00, Canada $4.50

UNIVERSAL RAI® & RAM™ SERIES

CONTENTS

INFORMATION SUMMARY 1

SAFETY PRECAUTIONS 2

OPERATING LIMITATIONS 2

INSTALLATION 3

LUBRICATION 6

OPERATION 7

OPERATING CHARACTERISTICS 8

TROUBLESHOOTING 9

MAINTENANCE/REPLACEMENTS
UNIVERSAL RAI® SERIES BLOWERS 10
RAM™ SERIES BLOWERS 14

FIGURES 18

TABLES 22

ASSEMBLY DRAWINGS 26

PARTS LIST 31

DO THESE THINGS TO GET THE MOST FROM YOUR ROOTS™ BLOWER

- ❑ Check shipment for damage. If found, file claim with carrier and notify ROOTS.
- ❑ Unpack shipment carefully, and check contents against Packing List. Notify ROOTS if a shortage appears.
- ❑ Store in a clean, dry location until ready for installation. Lift by methods discussed under INSTALLATION to avoid straining or distorting the equipment. Keep covers on all openings. Protect against weather and corrosion if outdoor storage is necessary.
- ❑ Read OPERATING LIMITATIONS and INSTALLATION sections in this manual and plan the complete installation.
- ❑ Provide for adequate safeguards against accidents to persons working on or near the equipment during both installation and operation. See SAFETY PRECAUTIONS.
- ❑ Install all equipment correctly. Foundation design must be adequate and piping carefully done. Use recommended accessories for operating protection.
- ❑ Make sure both driving and driven equipment is correctly lubricated before start-up. See LUBRICATION.
- ❑ Read starting check points under OPERATION. Run equipment briefly to check for installation errors and make corrections. Follow with a trial run under normal operating conditions.
- ❑ In event of trouble during installation or operation, do not attempt repairs of ROOTS furnished equipment. Notify ROOTS, giving all nameplate information plus an outline of operating conditions and a description of the trouble. Unauthorized attempts at equipment repair may void ROOTS warranty.
- ❑ Units out of warranty may be repaired or adjusted by the owner. It is recommended that such work be limited to the operations described in this manual, using ROOTS™ parts. Good inspection and maintenance practices should reduce the need for repairs.

NOTE: Information in this manual is correct as of the date of publication. ROOTS reserves the right to make design or material changes without notice, and without obligation to make similar changes on equipment of prior manufacture.

For your nearest ROOTS Office, dial our Customer Service Hot Line toll free; 1 877 363 ROOT(S) (7668) or direct 281-966-4700.

DRESSER®
Roots

IRB-180-102
Rev. 2.04

ROOTS™ products are sold subject to the current General terms of Sale, GTS-5001 and Warranty Policy WP-5020. Copies are available upon request.
Contact your local ROOTS Office or ROOTS Customer Service Hot Line 1.877.363.ROOT(S) (7668).

Safety Precautions

It is important that all personnel observe safety precautions to minimize the chances of injury. Among many considerations, the following should be particularly noted:

- Blower casing and associated piping or accessories may become hot enough to cause major skin burns on contact.
- Internal and external rotating parts of the blower and driving equipment can produce serious physical injuries. Do not reach into any opening in the blower while it is operating, or while subject to accidental starting. Protect external moving parts with adequate guards.
- Disconnect power before doing any work, and avoid bypassing or rendering inoperative any safety or protective devices.
- If blower is operated with piping disconnected, place a strong coarse screen over the inlet and avoid standing in the discharge air stream. **CAUTION: Never cover the blower inlet with your hand or other part of body.**
- Stay clear of open inlet piping (suction area) of pressure blowers, and the open discharge blast from vacuum blowers.
- Stay clear of the blast from pressure relief valves and the suction area of vacuum relief valves.
- Use proper care and good procedures in handling, lifting, installing, operating and maintaining the equipment.
- Casing pressure must not exceed 25 PSI (1725 mbar) gauge. Do not pressurize vented cavities from an external source, nor restrict the vents without first consulting ROOTS.
- Do not use air blowers on explosive or hazardous gases.
- Other potential hazards to safety may also be associated with operation of this equipment. All personnel working in or passing through the area should be trained to exercise adequate general safety precautions.

Operating Limitations

A ROOTS™ blower or exhauster must be operated within certain approved limiting conditions to enable continued satisfactory performance. Warranty is contingent on such operation.

Maximum limits for pressure, temperature and speed are specified in TABLE 1 for various models & sizes of blowers & exhausters. These limits apply to all units of normal construction, when operated under standard atmospheric conditions. Be sure to arrange connections or taps for thermometers and pressure or vacuum gauges at or near the inlet and discharge connections of the unit. These, along with a good tachometer, will enable periodic checks of operating conditions.

PRESSURE – The pressure rise, between inlet and discharge, must not exceed the figure listed for the specific unit frame size concerned. Also, in any system where the unit inlet is at a positive pressure above atmosphere a maximum case rating of 25 PSI gauge (1725 mbar) should not be exceeded without first consulting the ROOTS. Never should the maximum allowable differential pressure be exceeded.

On vacuum service, with the discharge to atmospheric pressure, the inlet suction or vacuum must not be greater than values listed for the specific frame size.

TEMPERATURE – Blower & exhauster frame sizes are approved only for installations where the following temperature limitations can be maintained in service:

- Measured temperature rise must not exceed listed values when the inlet is at ambient temperature. Ambient is considered as the general temperature of the space around the unit. This is not outdoor temperature unless the unit is installed outdoors.
- If inlet temperature is higher than ambient, the listed allowable temperature rise values must be **reduced** by 2/3 of the difference between the actual measured inlet temperature and the ambient temperature.
- The average of the inlet and discharge temperature must not exceed 250°F. (121°C).

SPEED – These blowers & exhausters may be operated at speeds up to the maximum listed for the various frame sizes. They may be direct coupled to suitable constant speed drivers if pressure/temperature conditions are also within limits. At low speeds, excessive temperature rise may be a limiting factor.

Special Note: The listed maximum allowable temperature rise for any particular blower & exhauster may occur well before its maximum pressure or vacuum rating is reached. This may occur at high altitude, low vacuum or at very low speed. The units' operating limit is always determined by the maximum rating reached first. It can be any one of the three: Pressure, Temperature or Speed.

INSTALLATION

ROOTS™ blowers & exhausters are treated after factory assembly to protect against normal atmospheric corrosion. The maximum period of internal protection is considered to be one year under average conditions, if shipping plugs & seals are not removed. Protection against chemical or salt water atmosphere is not provided. Avoid opening the unit until ready to start installation, as corrosion protection will be quickly lost due to evaporation.

If there is to be an extended period between installation and start up, the following steps should be taken to ensure corrosion protection.

- ❑ Coat internals of cylinder, gearbox and drive end bearing reservoir with Nox-Rust VCI-10 or equivalent. Repeat once a year or as conditions may require. Nox-Rust VCI-10 is petroleum soluble and does not have to be removed before lubricating. It may be obtained from Daubert Chemical Co., 2000 Spring Rd., Oak Brook, Ill. 60521.
- ❑ Paint shaft extension, inlet and discharge flanges, and all other exposed surfaces with Nox-Rust X-110 or equivalent.
- ❑ Seal inlet, discharge, and vent openings. It is not recommended that the unit be set in place, piped to the system, and allowed to remain idle for extended periods. If any part is left open to the atmosphere, the Nox-Rust VCI-10 vapor will escape and lose its effectiveness.
- ❑ Protect units from excessive vibration during storage.
- ❑ Rotate shaft three or four revolutions every two weeks.
- ❑ Prior to start up, remove flange covers on both inlet and discharge and inspect internals to insure absence of rust. Check all internal clearances. Also, at this time, remove gearbox and drive end bearing cover and inspect gear teeth and bearings for rust.

Because of the completely enclosed unit design, location of the installation is generally not a critical matter. A clean, dry and protected indoor location is preferred. However, an outdoor location will normally give satisfactory service. Important requirements are that the correct grade of lubricating oil be provided for expected operating temperatures, and that the unit be located so that routine checking and servicing can be performed conveniently. Proper care in locating driver and accessory equipment must also be considered.

Supervision of the installation by a ROOTS Service Engineer is not usually required for these units. Workmen with experience in installing light to medium weight machinery should be able to produce satisfactory results. Handling of the equipment needs to be accomplished with care, and in compliance with safe practices. Unit mounting must be solid, without strain or twist, and air piping must be clean, accurately aligned and properly connected.

Bare-shaft Units: Two methods are used to handle a unit without base. One is to use lifting lugs bolted into the top of the unit headplates. Test them first for tightness and fractures by tapping with a hammer. In lifting, keep the direction of cable pull on these bolts as nearly vertical as possible. If lifting lugs are not available, lifting slings may be passed under the cylinder adjacent to the headplates. Either method prevents strain on the extended drive shaft.

Packaged Units: When the unit is furnished mounted on a baseplate, with or without a driver, use of lifting slings passing under the base flanges is required. Arrange these slings so that no strains are placed on the unit casing or mounting feet, or on any mounted accessory equipment. **DO NOT** use the lifting lugs in the top of the unit headplates.

Before starting the installation, remove plugs, covers or seals from unit inlet and discharge connections and inspect the interior completely for foreign material. If cleaning is required, finish by washing the cylinder, headplates and impeller thoroughly with a petroleum solvent. Turn the drive shaft by hand to make sure that the impellers turn freely at all points. Anti-rust compound on the connection flanges and drive shaft extension may also be removed at this time with the same solvent. Cover the flanges until ready to connect piping.

Mounting

Care will pay dividends when arranging the unit mounting. This is especially true when the unit is a “bare-shaft” unit furnished without a baseplate. The convenient procedure may be to mount such a unit directly on a floor or small concrete pad, but this generally produces the least satisfactory results. It definitely causes the most problems in leveling and alignment and may result in a “Soft Foot” condition. Correct soft foot before operation to avoid unnecessary loading on the casing and bearings. Direct use of building structural framing members is not recommended.

For blowers without a base, it is recommended that a well anchored and carefully leveled steel or cast iron mounting plate be provided. The plate should be at

least 1 inch (25 mm) thick, with its top surface machined flat, and large enough to provide leveling areas at one side and one end after the unit is mounted. It should have properly sized studs or tapped holes located to match the unit foot drilling. Proper use of a high quality machinist's level is necessary for adequate installation.

With the mounting plate in place and leveled, set the unit on it without bolting and check for rocking. If it is not solid, determine the total thickness of shims required under one foot to stop rocking. Place half of this under each of the diagonally-opposite short feet, and tighten the mounting studs or screws. Rotate the drive shaft to make sure the impellers turn freely. If the unit is to be direct coupled to a driving motor, consider the height of the motor shaft and the necessity for it to be aligned very accurately with the unit shaft. Best unit arrangement is directly bolted to the mounting plate while the driver is on shims of at least 1/8 inch (3mm) thickness. This allows adjustment of motor position in final shaft alignment by varying the shim thickness.

Aligning

When unit and driver are factory mounted on a common baseplate, the assembly will have been properly aligned and is to be treated as a unit for leveling purposes. Satisfactory installation can be obtained by setting the baseplate on a concrete slab that is rigid and free of vibration, and leveling the top of the base carefully in two directions so that it is free of twist. The slab must be provided with suitable anchor bolts. The use of grouting under and partly inside the leveled and shimmed base is recommended.

It is possible for a base-mounted assembly to become twisted during shipment, thus disturbing the original alignment. For this reason, make the following checks after the base has been leveled and bolted down. Disconnect the drive and rotate the unit shaft by hand. It should turn freely at all points. Loosen the unit foot hold-down screws and determine whether all feet are evenly in contact with the base. If not, insert shims as required and again check for free impeller rotation. Finally, if unit is direct coupled to the driver, check shaft and coupling alignment carefully and make any necessary corrections.

In planning the installation, and before setting the unit, consider how piping arrangements are dictated by the unit design and assembly. Drive shaft rotation must be established accordingly and is indicated by an arrow near the shaft.

Typical arrangement on vertical units has the drive shaft at the top with counterclockwise rotation and discharge to the left. Horizontal units are typically arranged with the drive shaft at the left with counterclockwise rotation and discharge down. See Figure 3 and 4 for other various unit arrangements and possible conversions.

When a unit is DIRECT COUPLED to its driver, the driver RPM must be selected or governed so as not to exceed the maximum speed rating of the unit. Refer to Table 1 for allowable speeds of various unit sizes. A flexible type coupling should always be used to connect the driver and unit shafts.

Coupling halves must be accurately aligned, and a sufficient gap between shaft ends provided so that side strains and end thrust on either shaft are avoided or minimized. This will require considerable care in the mounting of the driver. The two shafts must be in as near perfect alignment in all directions as possible, and the gap must be established with the motor armature on its electrical center if end-play exists.

The following requirements of a good installation are recommended. Coupling halves must be fitted to the two shafts with a line to line thru .001" interference fit. Coupling halves must be warmed up per coupling manufacturer's recommendations. Maximum deviation in offset alignment of the shafts should not exceed .005" (.13 mm) total indicator reading, taken on the two coupling hubs. Maximum deviation from parallel of the inside coupling faces should not exceed .001" (.03 mm) when checked at six points around the coupling.

When a unit is BELT DRIVEN, the proper selection of sheave diameters will result in the required unit speed. This flexibility can lead to operating temperature problems caused by unit speed being too low. Make sure the drive speed selected is within the allowable range for the specific unit size, as specified under Table 1.

Belt drive arrangements usually employ two or more V-belts running in grooved sheaves. Installation of the driver is less critical than for direct coupling, but its shaft must be level and parallel with the unit shaft. **The driver should be mounted on the inlet side of a vertical unit (horizontal piping) and on the side nearest to the shaft on a horizontal unit.** The driver must also be mounted on an adjustable base to permit installing, adjusting and removing the V-belts. To position the driver correctly, both sheaves need to be mounted on their shafts and the nominal shaft center distance known for the belt lengths to be used.

Install the unit sheave so that its inner hub face is not more than 1/4 inch (6mm) from the drive end cover. See page 18 for minimum sheave diameter and maximum sheave width. The shaft fit should be such that the sheave can be worked into place by hand or by very light tapping. A tight or driving fit can damage a bearing, and may cause internal unit damage by forcing the impeller out of its normal operating position. A loose fit or wobbly sheave will cause vibration, and may result in shaft breakage.

CAUTION: Couplings as well as sheave bushings must have a slight slide fit with the unit shaft such that they can be installed in place by hand. Any force used to install them could change unit end clearance resulting in unit damage. If interference fit is desired for the coupling, the coupling hub should be heated and shrunk on the shaft. For engine drives, use "locktite" between the coupling hubs and the shafts and on the threads of the coupling set screws.

The driver sheave should also be mounted as close to its bearing as possible, and again should fit the shaft correctly. Position the driver on its adjustable base so that 2/3 of the total movement is available in the direction away from the unit, and mount the assembly so that the face of the sheave is accurately in line with the unit sheave. This position minimizes belt wear, and allows sufficient adjustment for both installing and tightening the belts. After belts are installed, adjust their tension in accordance with the manufacturer's instructions. However, only enough tension should be applied to prevent slippage when the unit is operating under load. Excessive tightening can lead to early bearing failures or shaft breakage.

Before operating the drive under power to check initial belt tension, first remove covers from the unit connections. Make sure the interior is still clean, then rotate the shaft by hand. Place a coarse screen over the inlet connection to prevent anything being drawn into the unit while it is operating, and avoid standing in line with the discharge opening. Put oil in the sumps per instructions under **LUBRICATION.**

Piping

Before connecting piping, remove any remaining anti-rust compound from Unit connections. Clean pipe should be no smaller than unit connections. In addition, make sure it is free of scale, cuttings, weld beads, or foreign material of any kind. To further guard against damage to the unit, especially when an inlet filter is not used, install a substantial screen of 16 mesh backed with hardware cloth at or near the inlet connections. Make provisions to clean this screen of collected debris after a few hours of operation. It should be removed when its usefulness has ended, as the wire will eventually deteriorate and small pieces going into the unit may cause serious damage.

Pipe flanges or male threads must meet the unit connections accurately and squarely. DO NOT attempt to correct misalignment by springing or cramping the pipe. In most cases this will distort the unit casing and cause impeller rubbing. In severe cases it can prevent operation or result in a broken drive shaft. For similar reasons, piping should be supported near the unit to eliminate dead weight strains. Also, if pipe expansion is likely to occur from temperature change, installation of flexible connectors or expansion joints is advisable.

Figure 2 represents an installation with all accessory items that might be required under various operating conditions. Inlet piping should be completely free of valves or other restrictions. When a shut-off valve can not be avoided, make sure a full size vacuum relief is installed nearest the unit inlet. This will protect against unit overload caused by accidental closing of the shut-off valve.

Need for an inlet silencer will depend on unit speed and pressure, as well as sound-level requirements in the general surroundings. An inlet filter is recommended, especially in dusty or sandy locations. A discharge silencer is also normally suggested, even though Whispair units operate at generally lower noise levels than conventional rotary blowers. Specific recommendations on silencing can be obtained from ROOTS.

Discharge piping requires a pressure relief valve, and should include a manual unloading valve to permit starting the unit under no-load conditions. Reliable pressure/vacuum gauges and good thermometers at both inlet and discharge are recommended to allow making the important checks on unit operating conditions. The back-pressure regulator shown in Figure 2 is useful mainly when volume demands vary while the unit operates at constant output. If demand is constant, but somewhat lower than the unit output, excess may be blown off through the manual unloading valve.

In multiple unit installations where two or more units operate with a common header, use of check valves is mandatory. These should be of a direct acting or free swinging type, with one valve located in each line between the unit and header. Properly installed, they will protect against damage from reverse rotation caused by air and material back-flow through an idle unit.

After piping is completed, and before applying power, rotate the drive shaft by hand again. If it does not move with uniform freedom, look for uneven mounting, piping strain, excessive belt tension or coupling misalignment.

DO NOT operate the unit at this time unless it has been lubricated per instructions.

LUBRICATION

LUBRICATION: For Units with a Grease Lubricated Drive End

A simple but very effective lubrication system is employed on the drive shaft end bearings. Hydraulic pressure relief fittings are provided to vent any excess grease, preventing pressure build-up on the seals. A restriction plug and metering orifice prevent loss of lubricant from initial surges in lubricant pressure but permit venting excess lubricant under steadily rising pressures.

When servicing drive end bearings, use a NLGI #2 premium grade aluminum complex* grease with 300°F (149°C) service temperature and moisture resistance and good mechanical stability. Using a pressure gun, slowly force new lubricant into each drive end bearing housing until traces of clean grease comes out of the relief fitting.

After a long shutdown, it is recommended that the grease fittings be removed, the old grease flushed out with kerosene or #10 lubricating oil, drained thoroughly, and bearings refilled with new grease. Be sure grease relief fittings are reinstalled. Grease should be added using a hand operated grease gun to the drive end bearings at varying time intervals depending on duty cycle and RPM. Table 4 has been prepared as a general greasing schedule guide based on average operating conditions. More frequent intervals may be necessary depending on the grease operating temperature and unusual circumstances. *ROOTS™ synthetic grease (ROOTS P/N T20019-) is highly recommended.

LUBRICATION: For Units with Splash Lubrication on Both Ends

Bearings and oil seals are lubricated by the action of the timing gears or oil slingers which dip into the main oil sumps causing oil to splash directly on gears and into bearings and seals. A drain port is provided below each bearing to prevent an excessive amount of oil in the bearings. Seals located inboard of the bearings in each headplate effectively retain oil within the sumps. Any small leakage that may occur should the seals wear passes into a cavity in each vented headplate and is drained downward.

Oil sumps on each end of the blower are filled by removing top vent plugs, Item (21), and filling until oil reaches the middle of the oil level sight gauge, Item (37), or the overflow plug.

Initial filling of the sumps should be accomplished with the blower not operating, in order to obtain the correct oil level. Approximate oil quantities required for blowers of the various models and configurations are listed in Table 3. Use a good grade of **industrial type** non-detergent, rust inhibiting, anti-foaming oil and of correct viscosity per Table 2. *ROOTS™ synthetic oil (ROOTS P/N 813-106-) is highly recommended. ROOTS™ does **NOT** recommend automotive type lubricants, as they are not formulated with the properties mentioned above.

NOTE: Lithium based greases are not compatible with the ROOTS™ synthetic grease used during manufacturing.

The oil level should not fall below the middle of the site gauge or overflow plug on URAI (ref. pg.20) when the blower is idle. It may rise or fall on the gauge during operation, to an extent depending somewhat on oil temperature and blower speed.

Proper lubrication is usually the most important single consideration in obtaining maximum service life and satisfactory operation from the unit. Unless operating conditions are quite severe, a weekly check of oil level and necessary addition of lubricant should be sufficient. During the first week of operation, check the oil levels in the oil sumps about once a day, and watch for leaks. Replenish as necessary. Thereafter, an occasional check should be sufficient. It is recommended that the oil be changed after initial 100 hours of operation. Frequent oil changing is not necessary unless the blower is operated in a very dusty location.

Normal life expectancy of petroleum based oils is about 2000 hours with an oil temperature of about 180°F (82°C). As the oil temperature increases by increments of 15-18°F (8°C - 10°C), the life is reduced by half. Example: Oil temperatures of 210-216°F (99°C - 102°C) will produce life expectancy of 1/4 or 500 hours. Therefore, it is considered normal to have oil change periods of 500 hours with petroleum based oils.

Normal life expectancy of ROOTS™ Synthetic Oil is about 4000 to 6000 hours with an oil temperature of about 180°F (82°C). As the oil temperature increases by increments of 15-18°F (8°C - 10°C), the life is reduced by half. Example: Oil temperatures of 210-216°F (99°C - 102°C) will produce life expectancy of 1/4 or 1000 to 1500 hours. Therefore, it is considered normal to have oil change periods of 1000-1500 hours with ROOTS™ Synthetic Oil.

NOTE: To estimate oil temperature, multiply the discharge temperature of the blower by 0.80. Example: if the discharge air temperature of the blower is 200° F, it is estimated that the oil temperature is 160° F.

*ROOTS™ Synthetic Oil & Grease is superior in performance to petroleum based products. It has high oxidation stability, excellent corrosion protection, extremely high film strength and low coefficient of friction. Typical oil change intervals are increased 2-3 times over petroleum based lubricants. Also, ROOTS™ Synthetic Oil is 100% compatible with petroleum based oils. Simply drain the oil in the blower and refill the reservoirs with ROOTS™ Synthetic Oil to maintain optimum performance of your ROOTS™ blower.

OPERATION

Before operating a blower under power for the first time, recheck the unit and the installation thoroughly to reduce the likelihood of avoidable troubles. Use the following procedure check list as a guide, but consider any other special conditions in the installation.

- ❑ Be certain that no bolts, tools, rags, or debris have been left in the blower air chamber or piping.
- ❑ If an outdoor intake without filter is used, be sure the opening is located so it cannot pick up dirt and is protected by a strong screen or grille. Use of the temporary protective screen as described under INSTALLATION is strongly recommended.
- ❑ Recheck blower leveling, drive alignment and tightness of all mounting bolts if installation is not recent. If belt drive is used, adjust belt tension correctly.
- ❑ Turn drive shaft by hand to make sure impellers still rotate without bumping or rubbing at any point.
- ❑ Ensure oil levels in the main oil sumps are correct.
- ❑ Check lubrication of driver. If it is an electric motor, be sure that power is available and that electrical overload devices are installed and workable.
- ❑ Open the manual unloading valve in the discharge air line. If a valve is in the inlet piping, be sure it is open.
- ❑ Bump blower a few revolutions with driver to check that direction of rotation agrees with arrow near blower shaft, and that both coast freely to a stop.

After the preceding points are cleared, blower is ready for trial operation under “no-load” conditions. The following procedure is suggested to cover this initial operation test period.

a. Start blower, let it accelerate to full speed, then shut off. Listen for knocking sounds, both with power on and as speed slows down.

b. After blower comes to a complete stop, repeat above, but let blower run 2 or 3 minutes. Check for noises, such as knocking sounds.

c. After blower comes to a complete stop, operate blower for about 10 minutes unloaded. Check oil levels. Observe cylinder and headplate surfaces for development of hot spots such as burned paint, indicating impeller rubs. Be aware of any noticeable increase in vibration.

Assuming that all trials have been satisfactory, or that necessary corrections have been made, the blower should now have a final check run of at least one hour under normal operating conditions. After blower is restarted, gradually close the discharge unloading valve to apply working pressure. At this point it is recommended that a good pressure gauge or manometer be connected into the discharge line if not already provided, and that thermometers be in both inlet and discharge lines. Readings from these instruments will show whether pressure or temperature ratings of the blower are being exceeded.

During the final run, check operating conditions frequently and observe the oil levels at reasonable intervals. If excessive noise or local heating develops, shut down immediately and determine the cause. If either pressure rise or temperature rise across the blower exceeds the limit specified in this manual, shut down and investigate conditions in the piping system. Refer to the **TROUBLESHOOTING CHECKLIST** for suggestions on various problems that may appear.

The blower should now be ready for continuous duty operation at full load. During the first few days make periodic checks to determine whether all conditions remain steady, or at least acceptable. This may be particularly important if the blower is supplying air to a process system where conditions can vary. At the first opportunity, stop the blower and clean the temporary inlet protective screen. If no appreciable amount of debris has collected, the screen may be removed. See comments under **INSTALLATION**. At this same time, verify leveling, coupling alignment or belt tension, and mounting bolt tightness.

Should operating experience prove that blower capacity is a little too high for the actual air requirements, a small excess may be blown off continuously through the manual unloading or vent valve. Never rely on the pressure relief valve as an automatic vent. Such use may cause the discharge pressure to become excessive, and can also result in failure of the valve itself. If blower capacity appears to be too low, refer to the **TROUBLESHOOTING CHECKLIST**.

Vibration Assessment Criteria

With measurements taken at the bearing locations on the housings, see chart below for an appropriate assessment guide for rotary lobe blowers rigidly mounted on stiff foundations.

In general, blower vibration levels should be monitored on a regular basis and the vibration trend observed for progressive or sudden change in level. If such a change occurs, the cause should be determined through spectral analysis.

As shown on the chart below, the level of all pass vibration will determine the need to measure discrete frequency vibration levels and the action required.

All Pass Vibration (in/sec)	Discrete Frequency Vibration (in/sec)	Action
0.45 or less	N/R	Approved
Greater than 0.45 but 1.0 or less	0.45 or less @ any frequency	Approved
	Greater than 0.45 @ any frequency	ROOTS™ Approval Required
Greater than 1.0	Less than 1.0	ROOTS™ Approval Required
	Greater than 1.0	ROOTS™ Approval Required

OPERATING CHARACTERISTICS

ROOTS™ rotary blowers and exhausters, as covered in this manual, are available in basic frame sizes ranging from 2 inch to 7 inch gear diameter. Various models, within this gear diameter range, are available with different case lengths to produce reasonable steps in flow capacity. The shorter case lengths have lower volumetric capacities, but are capable of operating against higher pressures. All models are available for air service and there are specifically designed models for gas service.

The basic ROOTS™ rotary lobe blower is a positive displacement type unit. Flow capacity is determined by frame size, operating speed and pressure conditions. It employs two impellers mounted on parallel shafts rotating in opposite directions within a cylinder closed at the ends by head-plates. As the impellers rotate, gas is drawn into one side of the cylinder and forced out the opposite side. The pressure or vacuum developed depends on the resistance of the piping and process system.

The unit is a precision engineered product with very fine clearances between the rotating impellers and stationary case. Since there is no actual contact between these surfaces, internal lubrication is not required. Clearances are maintained by a pair of accurately machined timing gears, mounted on the two shafts extended outside the blower casing.

Operation of the familiar basic rotary lobe blower is illustrated in FIGURE 1, where air flow is left to right from inlet to discharge with the top impeller rotating clockwise. In Position 1 it is delivering a known volume (B) to the discharge, while space (A) between the lower impeller and cylinder wall is being filled. Counterclockwise rotation of this impeller then traps equal volume (A) in Position 2, and further rotation delivers it to the discharge in Position 3.

One complete revolution of the driving shaft alternately traps four fixed and equal volumes of air (two by each impeller) and pushes them through to the discharge. The volume capacity of a lobe blower operating at a constant speed therefore remains relatively independent of reasonable inlet of discharge pressure variations. To change capacity, it is necessary either to change speed of rotation or blow off some of the discharge air.

No attempt should ever be made to control capacity by means of a throttle valve in the intake or discharge piping. This will not only increase the power load on the driver, but can also overload and seriously damage the blower. If a possibility does exist that flow to the blower inlet may be cut off during normal operation of a process, then an adequate vacuum relief valve must be installed near the blower. A pressure type relief valve in the discharge line near the blower is required for protection against cut-off or blocking in this line. Refer to FIGURE 3 for a complete piping schematic.

When a belt drive is installed, blower speed can usually be adjusted to obtain desired capacity by changing the diameter of one or both sheaves. In a direct coupled arrangement a variable speed motor or transmission is required, or excess air may be blown off through a manually controlled unloading valve and silencer. If returned to the blower inlet, the air must be cooled to 100°F (38°C) through a by-pass arrangement to maintain acceptable blower temperatures.

Before making any change in blower capacity, or operating conditions, contact ROOTS for specific information applying to your particular blower. In all cases, operating conditions must be maintained within the approved range of pressures, temperatures and speeds as stated under **LIMITATIONS.** The air blower must not be used to handle liquids or solids as serious damage to the rotating parts may result.

FIGURE 1 – FLOW THROUGH A BASIC ROTARY LOBE BLOWER

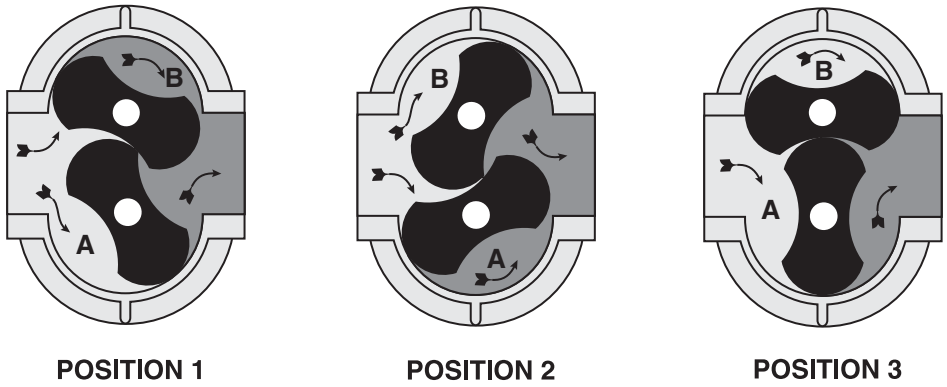

TROUBLESHOOTING

Trouble	Item	Possible Cause	Remedy
No flow	1	Speed too low	Check by tachometer and compare with published performance
	2	Wrong rotation	Compare actual rotation with Figure 1 or 2 Change driver if wrong
	3	Obstruction in piping	Check piping, valves, silencer to assure open flow path
Low capacity	4	Speed too low	See item 1, If belt drive, check for slippage and readjust tension
	5	Excessive pressure rise	Check inlet vacuum and discharge pressure and compare with Published performance
	6	Obstruction in piping	See item 3
	7	Excessive slip	Check inside of casing for worn or eroded surfaces causing excessive clearances
Excessive power	8	Speed too high	Check speed and compare with published performance
	9	Excessive pressure rise	See Item 5
	10	Impeller rubbing	Inspect outside of cylinder for high temperature areas, then check for impeller contact at these points. Correct blower mounting, drive alignment
	11	Scale, sludge, rust or product build up	Clean blower appropriately
Overheating of bearing or gears	12	Inadequate lubrication	Check oil sump levels in gear and drive end headplates
	13	Excessive lubrication	Check oil levels. If correct, drain and refill with clean oil of recommended grade
	14	Excessive pressure rise	See Item 5
	15	Coupling misalignment	Check carefully. Realign if questionable
	16	Excessive belt tension	Readjust for correct tension
Vibration	17	Misalignment	See Item 15
	18	Impellers rubbing	See Item 10
	19	Worn bearings/gears	Check gear backlash and condition of bearings, and replace as indicated
	20	Unbalanced or rubbing impeller	Scale or process material may build up on casing and impellers, or inside impellers. Remove build-up to restore original clearances and impeller balance
	21	Driver or blower loose	Tighten mounting bolts securely
	22	Piping resonances	Determine whether standing wave pressure pulsations are present in the piping
	23	Scale/sludge build-ups	Clean out interior of impeller lobes to restore dynamic balance
	24	Casing strain	re-work piping alignment to remove excess strain
Driver stops, or will not start	25	Impeller stuck	Check for excessive hot spot on headplate or cylinder. See item 10. Look for defective shaft bearing and/or gear teeth
	26	Scale, sludge, rust or product build-up	Clean blower appropriately
Excessive breather	27	Broken seal	Replace seals
Blow-by or excessive oil leakage to vent area	28	Defective O-ring	Replace seals and O-ring
Excessive oil leakage in vent area	29	Defective/plugged breather	Replace breather and monitor oil leakage

MAINTENANCE & REPLACEMENTS: UNIVERSAL RAI® SERIES BLOWERS

A good program of consistent inspection and maintenance is the most reliable method of minimizing repairs to a blower. A simple record of services and dates will help keep this work on a regular schedule. Basic service needs are:

- Lubrication
- Checking for hot spots
- Checking for increases or changes in vibration and noise
- Recording of operating pressures and temperatures

Above all, a blower must be operated within its specified rating limits, to obtain satisfactory service life.

A newly installed blower should be checked often during the first month of full-time operation. Attention thereafter may be less frequent assuming satisfactory performance. Lubrication is normally the most important consideration and weekly checks of lubricant levels in the gearbox and bearing reservoirs should be customary. Complete oil change schedules are discussed under **LUBRICATION**.

Driver lubrication practices should be in accordance with the manufacturer's instructions. If direct connected to the blower through a lubricated type coupling, the coupling should be checked and greased each time blower oil is changed. This will help reduce wear and prevent unnecessary vibration. In a belted drive system, check belt tension periodically and inspect for frayed or cracked belts.

In a new, and properly installed, unit there is no contact between the two impellers, or between the impellers and cylinder or headplates. Wear is confined to the bearings (which support and locate the shafts) the oil seals, and the timing gears. All are lubricated and wear should be minimal if clean oil of the correct grade is always used. Seals are subject to deterioration as well as wear, and may require replacement at varying periods.

Shaft bearings are designed for optimum life under average conditions with proper lubrication and are critical to the service life of the blower. Gradual bearing wear may allow a shaft position to change slightly, until rubbing develops between impeller and casing. This will cause spot heating, which can be detected by observing these surfaces. Sudden bearing failure is usually more serious. Since the shaft and impeller are no longer supported and properly located, extensive general damage to the blower casing and gears is likely to occur.

Oil seals should be considered expendable items, to be replaced whenever drainage from the headplate vent cavity becomes excessive or when the blower is disassembled for any reason. Sealing effectiveness can vary considerably from seal to seal and is also affected to surprising degree by shaft finish under the seal lip. Because of these normal variables, minor seal leakage should not be considered as indicating seal replacement.

Timing gear wear, when correct lubrication is maintained, should be negligible over a period of years. Gear teeth are cut to provide the correct amount of backlash, and gears correctly mounted on the shafts will accommodate a normal amount of tooth wear without permitting contact between lobes of the two impellers. However, too high an oil level will cause churning and excessive heating. This is indicated by unusually high temperature at the bottom of the gear housing. Consequent heating of the gears will result in loss of tooth-clearance , backlash and rapid wear of the gear teeth usually will develop. Continuation of this tooth wear will eventually produce impeller contacts (knocking), and from this point serious damage will be unavoidable if blower operation is continued. A similar situation can be produced suddenly by gear tooth fracture, which is usually brought on by sustained overloading or momentary shock loads.

Problems may also develop from causes other than internal parts failure. Operating clearances within a blower are only a few thousandths of an inch. This makes it possible for impeller interference or casing rubs to result from shifts in the blower mounting, or from changes in piping support. If this type of trouble is experienced, and the blower is found to be clean, try removing mounting strains. Loosen blower mounting bolts and reset the leveling and drive alignment. Then tighten mounting again, and make sure that all piping meets blower connections accurately and squarely Foreign materials in the blower will also cause trouble, which can only be cured by disconnecting the piping and thoroughly cleaning the blower interior.

A wide range of causes & solutions for operating troubles are covered in the **TROUBLE SHOOTING CHECKLIST**. The remedies suggested should be performed by qualified mechanics with a good background, using procedures detailed in this manual. Major repairs generally are to be considered beyond the scope of maintenance, and should be referred to ROOTS.

Warranty failures should not be repaired at all, unless specific approval has been obtained through ROOTS before starting work. Unauthorized disassembly within the warranty period will void the warranty.

It is recommended that major repairs be performed at an authorized ROOTS facility. However, it is recognized that this may not always be practical. If a blower is out of warranty, mechanical adjustments and parts replacement may be undertaken locally at the owner's option and risk. It is recommended that ROOTS™ parts be used to insure fit and suitability. The maintenance of a small stock of on-hand spare parts can eliminate possible delays. When ordering parts give item numbers and their word descriptions from the appropriate sectional drawings. Also specify quantities required and the blower model and serial number from the nameplate.

Repairs or adjustments are best performed by personnel with good mechanical experience and the ability to follow the instructions in this manual. Some operations involve extra care, patience, and a degree of precision work. This is especially true in timing impellers and in handling bearings. Experience indicates that high percentages of bearing failures are caused by dirt contamination before or during assembly. Therefore, the work area should be cleaned before starting disassembly, and new or re-usable parts protected during progress of the work.

In the following repair procedures, numbers shown in brackets ( ) correspond to the item numbers used in sectional drawings. It is recommended that the procedures be studied carefully and completely, with frequent reference to the drawings, before starting work. This will produce better efficiency through an understanding of what work is to be done, and the order of doing it. Before disassembly, mark all parts so that they may be returned to original locations or relative positions.

Requirements for special tools will depend on the work to be done. If impeller clearances and float are to be checked or re-set, a dial indicator and a set of long feeler gauges will be needed. Work involving removal of the timing gears cannot be accomplished without a suitable puller.

Design of ROOTS™ blower is simple, and most repair operations are straightforward. For this reason, the following procedures are intended mainly to indicate a preferred work order and to call out points to be observed. Where special operations are required, detailed coverage is given.

A – Replacing Timing Gears

1. Drain all oil from the gearhouse by removing drain plug (21) in the bottom. Remove gearhouse by taking out all cap screws (23) in its flange. It may be necessary to bump the sides with a wood block or mallet to break the flange joint.

2. Reach through one of the blower pipe connections and place a chalk mark on the strip of one impeller and the mating waist of the other, so that they may easily be returned to their original relative positions.

3. **GEAR REMOVAL:** CAUTION: Do not remove gear nuts (17) completely before the gears are unseated from the taper fits or damage/injury may result. For this operation, the impellers should be wedged, as shown in Table 5. Back off gear clamping nuts (17) about 1/4". Use a suitable puller or wedge. As the puller set screw is torqued, the puller will have a tendency to turn and contact teeth of the other gear. To prevent this contact, hold the puller corner nut with a wrench while torquing the set screw. Once the gear is unseated, remove the puller. Remove gear nuts (17) and the gear.

4. **GEAR INSTALLATION:** Place impellers in correct position as previously marked. Be sure shafts and gear bores are clean, oil free and free of scratches. Clean the shaft tapered fits. Place hardwood wedges as shown in Table 5. Install drive gear (4) and gear nut (17). Tighten the drive gear nut to the torque given below. Blower assembly must be fastened down for torquing operation.

5. Installing driven gear (4) – Insert a long, metal feeler gauge between the impellers' lobes at the fronts or backs as shown below. Feeler gauge thickness to be a middle value from Table 5 for fronts and backs. Install nut (17). Tighten lightly with a small wrench, then check front and back clearances against Table 5 for each 45° position. Both fronts and backs should be about the same and within the specified range in Table 5. Adjust gear position, if necessary, then insert the corrected feeler gauge and wedges and use a torque wrench to tighten the gear nut to the torque specified in below. Remove wedges and rotate the drive shaft by hand to make sure there are no gear tight spots or impeller contacts. **CAUTION**! *Keep fingers away from impellers and gears.*

Universal RAI® series blower Gear Nut Torque

Frame Size	Torque	
	lb.-ft.	(kg-m)
22, 24,	60	(8.3)
32, 33, 36	110	(15.2)
42, 45, 47	190	(26.3)
53, 56, 59	250	(34.6)
65, 68, 615	400	(55.3)
76, 711, 718	550	(76.1)

6. Check the end clearances between impellers and headplates. Adjust clearances per B-15 below.

7. When clearances are correct, clean and re-install the gearhouse. Check condition of flange gasket (7) and replace if questionable. Fill gearhouse to correct level with proper grade oil.

B – Replacing Shaft Bearings and Impellers

Remove coupling or sheave from the drive shaft. Drain and remove gearhouse, and pull the timing gears. If gears are to be re-used, mark them so they may be returned to the same shafts.

1. Break corners and deburr the keyway. Remove bearing end cover at the drive end. Remove bearing clamp plates (34).

2. Make single and double identifying punch marks on the mating edges of headplate and cylinder flanges at the two ends of the blower.

3. At the drive end, drive out the two dowel pins and remove all capscrews holding headplate to cylinder. By inserting jacking screws into the two threaded flange holed, and turning them in evenly, the headplate will be separated from the cylinder. As the headplate comes off the shafts it will bring bearings with it. 2-1/2" and 3-1/2" gear diameter units do not have tapped holes for jack screws in the drive end headplates. Remove dowel pins and all capscrews holding headplate to cylinder and foot on the drive end. Support unit under gear end cylinder flange with the shafts vertical. Using soft metal block against gear end shafts, push them out of gear end headplate.

4. For 2-1/2" and 3-1/2" gear diameter units, support the drive end headplate on the underside, and using soft metal block against drive end shafts, push them out of drive end headplate.

   For 4", 6" & 7" gear diameter units, from the gear end, using a wood or soft metal block against the ends of the shafts, drive them out of the head plate. If they are to be reused, protect them from damage in this operation.

5. If blower interior surfaces need cleaning, it may be advisable to separate the gear end headplate from the cylinder. Use the same general procedure as employed at the drive end.

6. Working from the back (flat) face of each head plate, push or tap out the bearings and seals. Use a round bar or tube that will pass through the shaft clearance holes in the headplates. All lip seals will be damaged during removal and must be replaced.

7. Clean bearing and seal pockets in headplates and remove burrs or rough edges. (Apply a thin coating of sealant on seal O.D.) Press new seals (27) into gear end headplate using a round tube or bar with recessed end that will bear on the outer metal edge of seal enclosure. Seal lip should point toward the driving tool. Seals to be flush without board bore face. Apply a light coat of oil or grease to the seal lips. In a similar fashion, install lip seals into the drive end headplate.

8. Place cylinder on a flat surface. Assemble gear end headplate to cylinder after checking flange punch marks. Drive in the two locating dowel pins before tightening flange screws. Also install gear end foot using the same longer cap screws (32) and washers (41). (On 6" & 7" UNIVERSAL RAI® blower install both gear end feet.)

9. Place the assembly horizontally on steel blocks with gear end headplate on bottom. The height of the blocks should be sufficient to clear gear end shaft extensions. Assemble impellers into the cylinder with the drive shaft (longer shaft) in same location as in original assembly. Before starting the shafts through the headplate holes, make sure shaft ends have no sharp or rough edges to damage seal lips. Position impellers at 90° to each other in the cylinder, using lobe-and-waist match marks if original impellers are being re-installed. Install drive end headplate and feet in same manner as gear end.

10. It is recommended that new bearings be used for rebuild. Apply thin film of machine oil on the shaft bearing fit, bearing I.D., and headplate bearing bore. Install drive end bearings into headplate. Use a tube with flanged end that will contact both bearing faces simultaneously. Refer to Assembly Drawing for proper bearing depths.
    NOTE: *Cylindrical drive bearing should be installed with inner race large shoulder facing outboard.*

11. Place blower on its feet on a flat surface. Loosen feet capscrews (32) and square up unit. Re-tighten capscrews (32). Clamp unit down to a solid base for further assembly.

12. Oil the gear end bearing fits as described previously. Install 2-1/2" thru 5" blower gear end bearings flush with the headplate bearing shoulders using proper drivers. On 6" & 7" gear diameter units, install thrust washer (29) in bearing bores then install gear end bearings so they protrude 1/16" (1.6mm) above headplate surface.

13. Install bearing clamp plates (34). On 6" & 7" gear diameter units, blower impeller end clearances are also to be set during this step. Install clamp plates (34) with capscrews (31) making sure that the gap between the clamp plates and the headplate is even all around. At the same time, set end clearances per Table 5.

14. Install gears and time impellers as in (A).

15. For setting end clearances on 2-1/2” thru 5” gear diameter units, special tools, thrust adjuster fork and thrust adjuster saddle are required. Refer to Table 5 for installation of tools. The flat side of the saddle rests against the bearing inner race and the flat side of the fork rests against the back side of the gear. Install a shim, with thickness equal to gear end clearance (Table 5), between the impeller and the gear end headplates. Tap on top of the fork until the shim becomes snug. Remove the shim and check end clearances. To increase gear end clearance, tap on the end of the gear end shaft with a soft metal mallet. Set end clearances for 6” & 7” by turning capscrews (31) evenly in or out.

16. Install drive end cover (5) after packing bearing cavities with suitable grease. Replace drive shaft seal. Lip must point toward (33) the bearing. Exercise care not to damage the lip as it passes over shaft keyway.

17. Install gasket item (7). Install the gear house after cleaning out the inside. Tighten gear box cap screws (23) evenly. Fill with correct grade of oil until oil flows out through oil level hole. Grease drive and bearings. (See Lubrication.)

18. Reinstall coupling or belt sheave making sure that they have a slight slide fit with the shaft and could be installed by hand.

TECHNICAL SUPPLEMENT

for 32, 33, 36, 42, 45, 47, 53, 56, 59, 65, 68, 615 UNIVERSAL RAI®-G BLOWERS

ROOTS™ Universal RAI™-G rotary positive gas blowers are a design extension of the basic Universal RAI™ blower model. URAI™-G blower uses (4) mechanical seals in place of the standard in board lip seals to minimize gas leakage into the atmosphere. The seal vent chambers are plugged. These units are intended for gases which are compatible with cast iron case material, steel shafts, 300/400 series stainless steel and carbon seal components, viton o-rings and the oil/grease lubricants. If there are any questions regarding application or operation of this gas blower, please contact factory.

Precaution: ***URAI™-G blowers: Care must be used when opening the head plate seal vent chamber plugs (43) as some gas will escape–if it is a pressure system, or the atmospheric air will leak in-if the system is under vacuum. There is a possibility of some gas leakage through the mechanical seals. This leakage on the gear end will escape through the gear box vent, and on the drive end, through the grease release fittings. If the gas leakage is undesirable, each seal chamber must be purged with an inert gas through one purge gas hole (43) per seal . There are two plugged purge gas holes(1/8 NPT) provided per seal. The purge gas pressure must be maintained one psi above the discharge gas pressure. Also, there exists a possibility of gear end oil and drive end grease leakage into the gas stream.***

The lubricants selected must be compatible with the gas. Mechanical Seal Replacement: Disassemble the blower. During disassembly, damage to mechanical seals is very likely. During rebuild, always use new mechanical seals. Prior to any assembly, make sure that all parts are completely clean and free from nicks and scratches.

(1) Place head plate on an assembly table with seal bores pointing up. Coat the OD of the stationary seal element and install it with carbon facing up in the seal bore with a seal driver that is guided by the bearing bore. Drive the seal flush with front face of the seal bore. Repeat this procedure for all four seals. Apply a light coating of lubricating oil on the sealing surface. Protect sealing faces during assembly from any damage.

(2) Apply teflon based sealant on the cylinder flanges before installing head plates. Continue the assembly procedure as outlined up to bearing installation. Before installation of the bearings, the seal mating rings need to be installed. Apply light film of lubricating oil on mating ring o-rings and sealing faces. Slide mating rings on the shaft and up to carbon faces making sure that no damage to the o-rings occur during installation (break sharp shaft corners to avoid damage to the o-rings during initial preparation). Install bearings all the way against the back bearing bore shoulders.

(3) Complete the rest of the assembly.Make sure all plugged holes are sealed with teflon thread liquid sealant.

Note: On 6” gear diameter units, shims (44) are used between the bearing clamp plates and the head plate on the gear end.

Also, on size 32 and 42, washers with embedded o-rings are used on the center head plate to cylinder bolts.

After the assembly is completed, plug the blower inlet and discharge connections and run static soap bubble. Leak test to assure leak free assembly.

For satisfactory operation of mechanical seals, synthetic lubricants are recommended (Check suitability to gases before using.)

Oils:

(1) ROOTS™ GT Synthetic Lubricant ROOTS P/N 13-106-001 (1) one quart ISO-220

(2) Mobil SHC 600 Series Lubricating Oils

Grease:

ROOTS™ Synthetic Grease – NLGI # 2
ROOTS P/N T20-019-001 (1) one 14 oz tube

MAINTENANCE & REPLACEMENTS: RAM™ SERIES BLOWERS

A good program of consistent inspection and maintenance is the most reliable method of minimizing repairs to a blower. A simple record of services and dates will help keep this work on a regular schedule. Basic service needs are:

- Lubrication
- Checking for hot spots
- Checking for increases or changes in vibration and noise
- Recording of operating pressures and temperatures

Above all, a blower must be operated within its specified rating limits, to obtain satisfactory service life.

A newly installed blower should be checked often during the first month of full-time operation. Attention thereafter may be less frequent assuming satisfactory performance. Lubrication is normally the most important consideration and weekly checks of lubricant levels in the gearbox and bearing reservoirs should be customary. Complete oil change schedules are discussed under **LUBRICATION**.

Driver lubrication practices should be in accordance with the manufacturer's instructions. If direct connected to the blower through a lubricated type coupling, the coupling should be checked and greased each time blower oil is changed. This will help reduce wear and prevent unnecessary vibration. In a belted drive system, check belt tension periodically and inspect for frayed or cracked belts.

In a new, and properly installed, unit there is no contact between the two impellers, or between the impellers and cylinder or headplates. Wear is confined to the bearings (which support and locate the shafts) the oil seals, and the timing gears. All are lubricated and wear should be minimal if clean oil of the correct grade is always used. Seals are subject to deterioration and wear, and may require replacement at varying periods.

Piston ring seals (28) are designed to operate without rubbing contact, once temperature and thermal growth have stabilized. The stationary rings will rub the rotating sleeve (38) briefly as a result of temperature cycles that occur during the startup and shutdown of the unit. The sleeves are hardened and the rings are coated with dry lubricant that provides for temporary break in wear. Replace piston ring seals if they become excessively worn or inspection shows more than .010" (.25mm) axial clearance between ring and groove.

Shaft bearings are designed for optimum life under average conditions with proper lubrication and are critical to the service life of the blower. Gradual bearing wear may allow a shaft position to change slightly, until rubbing develops between impeller and casing. This will cause spot heating, which can be detected by observing these surfaces. Sudden bearing failure is usually more serious. Since the shaft and impeller are no longer supported and properly located, extensive general damage to the blower casing and gears is likely to occur.

Oil seals should be considered expendable items, to be replaced whenever drainage from the headplate vent cavity becomes excessive or when the blower is disassembled for any reason. Sealing effectiveness can vary considerably from seal to seal and is also affected to surprising degree by shaft finish under the seal lip. Because of these normal variables, minor seal leakage should not be considered as indicating seal replacement.

Timing gear wear, when correct lubrication is maintained, should be negligible over a period of years. Gear teeth are cut to provide the correct amount of backlash, and gears correctly mounted on the shafts will accommodate a normal amount of tooth wear without permitting contact between lobes of the two impellers. However, too high an oil level will cause churning and excessive heating. This is indicated by unusually high temperature at the bottom of the gear housing. Consequent heating of the gears will result in loss of tooth-clearance , backlash and rapid wear of the gear teeth usually will develop. Continuation of this tooth wear will eventually produce impeller contacts (knocking), and from this point serious damage will be unavoidable if blower operation is continued. A similar situation can be produced suddenly by gear tooth fracture, which is usually brought on by sustained overloading or momentary shock loads.

Problems may also develop from causes other than internal parts failure. Operating clearances within a blower are only a few thousandths of an inch. This makes it possible for impeller interferences or casing rubs to result from shifts in the blower mounting, or from changes in piping support. If this type of trouble is experienced, and the blower is found to be clean, try removing mounting strains. Loosen blower mounting bolts and reset the leveling and drive alignment. Then tighten mounting again, and make sure that all piping meets blower connections accurately and squarely Foreign materials sucked into the blower will also cause trouble, which can only be cured by disconnecting the piping and thoroughly cleaning the blower interior.

A wide range of causes & solutions for operating troubles are covered in the **TROUBLE SHOOTING CHECKLIST**. The remedies suggested should be performed by qualified mechanics with a good background, using procedures detailed in this manual. Major repairs generally are to be considered beyond the scope of maintenance, and should be referred to ROOTS.

Warranty failures should not be repaired at all, unless specific approval has been obtained through a Sales Office or the factory before starting work. Unauthorized disassembly within the warranty period will void the warranty.

It is recommended that major repairs be performed at an authorized ROOTS facility. However, it is recognized that this may not always be practical. If a blower is out of warranty, mechanical adjustments and parts replacement may be undertaken locally at the owner's option and risk. It is recommended that ROOTS™ parts be used to insure fit and suitability. The maintenance of a small stock of on-hand spare parts can eliminate possible delays. When ordering parts give Item numbers and their word descriptions from sectional drawings and parts lists. Also specify quantities wanted and the blower size and serial number from the nameplate.

Repairs or adjustments are best performed by personnel with good mechanical experience and the ability to follow the instructions in this manual. Some operations involve extra care, patience, and a degree of precision work. This is especially true in timing impellers and in handling bearings. Experience indicates that high percentages of bearing failures are caused by dirt contamination before or during assembly. Therefore, the work area should be cleaned before starting disassembly, and new or re-usable parts protected during progress of the work.

In the following repair procedures, numbers shown in brackets ( ) correspond to the Item numbers used in assembly drawings, and parts lists. It is recommended that the procedures be studied carefully and completely, with frequent reference to the drawings, before starting work. This will produce better efficiency through an understanding of what work is to be done, and the order of doing it. Before disassembly, mark all parts so that they may be returned to original locations or relative positions.

Requirements for special tools will depend on the work to be done. If impeller clearances and float are to be checked or re-set, a dial indicator and a set of long feeler gauges will be needed. Work involving removal of the timing gears cannot be accomplished without a puller suitable. Heat must be used during bearing and sleeve installation.

Design of ROOTS™ blower is simple, and most repair operations are straightforward. For this reason, the following procedures are intended mainly to indicate a preferred work order and to call out points to be observed. Where special operations are required, detailed coverage is given.

DISASSEMBLY OF DRIVE END

1. Remove the sheave or coupling and key from the drive shaft. File off any burrs or sharp edges along the keyway.
2. Drain oil by removing drain plug (22).
3. Remove the flange screws (75). Tap the drive end cover to loosen it, then slide it along the shaft care fully to avoid damaging the lip seal (33) on the drive shaft keyway. Remove the gasket (7). Remove oil slinger (40) and cap screw (60).
4. Remove bearing clamp plates (34) by unscrewing capscrews (32) and removing lock washers (35). Keep shim halves (10) together exactly as removed by tagging them with each clamping plate.
5. Remove the headplate – remove all capscrews (23) holding headplate to the cylinder. Insert jacking screws into the four threaded flange holes and turn them in evenly. The headplate will separate from the cylinder. The lip seals (27), and bearing outer race and rollers, are removed with the headplate and can be pressed out later.
6. Remove the bearing inner race and sleeve (38) from the shaft with aid of a bearing puller by inserting the puller jaws in the groove in the sleeve and applying the jacking screw against the end of the shaft. Protect the threaded hole and the end of the shaft with a small, flat spacer between the shaft and the puller.

DISASSEMBLY OF GEAR END

1. Drain oil completely from the gearbox sump by removing plugs (22) in bottom of the headplate (1).
2. Loosen all flange screws (75) in the gearbox and remove all but two upper screws. Bump the gear box to break the joint if it cannot be pulled free by hand, then remove the last two screws and lift off the gearbox. Remove gasket (7).
3. Removing gears: CAUTION**:** Do not remove gear nuts (31) completely before the gears are unseated from the taper fits or damage/injury may result. Be sure that each gear is marked for return to the same shaft in the same angular position and that the gears have match marks for the teeth. For this operation, the impellers should be wedged as shown in Figure 8. Back off nuts (31) and slinger (46). The timing gears (4) have two 1/2" – 13 holes for pulling purposes. Use a suitable puller.
4. Remove bearing clamp plates (54) by unscrewing capscrews (32) and removing lock washers. Group the shims (10), the wavy spring washers (29) with each clamp plate and tag for ease of reassembly.
5. Remove the headplate – remove all capscrews 23) holding the headplate to the cylinder. Insert jacking screws into the four (4) threaded flange holes and turn them in evenly. They headplate will separate from the cylinder. The lip seals (27), and bearing outer race and rollers, are removed with the headplate and can be pressed out later.

   For RAM™-J WHISPAIR™ gas pump units:
   The gear end headplate which is removed next requires a different approach from the drive end. On this end, the shafts are forced from the bearing bore by using a bar across the end of the shaft with threaded rods to the headplate. Once the headplates are removed from the assembly, the seal housings can be pressed or driven from

the headplate bores. Generally, new seals will be required prior to reassembly.

6. Remove the bearing inner race and sleeve (38) from the shaft with the aid of a bearing puller by inserting the puller jaws in the groove in the sleeve and applying the jacking screw against the end of the shaft. Protect the threaded hole and the end of the shaft with a small, flat spacer between the shaft and the puller.

ASSEMBLY

Prior to any assembly operation, it is essential that all parts are completely clean and free from nicks and scratches.

Prior to assembly, lightly coat the groove in the sleave with slip plate. ROOTS P/N813-314-000.

1. Assembly of Piston ring seals (28) – To avoid scratching the lip seal surface, install the Piston ring seals (28) in the sleeves (38) from the end nearest the groove before assembling the sleeve on the shaft.

   Unhook the gap joint and expand the ring while sliding it to the groove, then compress it so one end of the hook joint slides over the other. Move the ring in the groove to be sure it is free.

   NOTE: *Care must be taken not to scratch or dent the sleeve surface since it is the sealing surface for the lip seal.*

2. Installation of sleeves (38) – heat the sleeve to 300° F. (149°C) then quickly slide it on the shaft tightly against the impeller. If the sleeve hangs up during assembly, it can be pressed into place using a tubular pressing tool with square, clean ends.

3. Assembly of seals (27) in headplate (1) – Place headplate flat with seal bores up. Be sure the pressing tool face is clean and square and there is a smooth, clean entering bevel in the headplate. Lubricate the seal lips. Place seal over the bore with lip facing up, then press the seal evenly until it is flush with bore face.

   For Gas Sealed Units: Assemble mechanical seals (27) in headplate – (**CAUTION:** *Care must be used to avoid damaging the carbon face. Before proceeding with this step, you should have a piloted seal driver which is designed to clear the carbon face.*) with headplate positioned horizontally with seal bores up. Be sure the pressing tool face is clean and square and there is a smooth, clean entering bevel in the headplate. Place the seal over the bore with carbon facing up. Then press the seal evenly on its steel shell using the piloted seal driver until the driver seats against the stop.

4. Assembly of impellers (12 and 13) to headplate (1) – Place gear end headplate flat on 3 in. (76 mm) blocks with the smallest bores facing up. Inspect entering bevels to be sure they are smooth and clean. Locate the drive impeller correctly (top for vertical units and toward the driver for horizontal units). Place the seal ring gaps toward the inlet for pressure applications and towards dis charge for vacuum applications. Insert the impeller shafts in the headplate so the impellers rest on the headplate. Use care to avoid damaging the lip seals.

5. Assembly of cylinder (11) to gear end headplate (1) – Install dowel pins (16) and secure cylinder to headplate with capscrews (23). Torque to 35 ft.-lbs (4.5 Kg-m). Then, install drive end headplate (1) and dowel pins (16) and secure with capscrews (23). Install feet (76) & 77) to both headplates and secure with capscrews (66). Torque to 35 ft.-lbs. (4.5 kg-m).

   For Gas Sealed Units: Use a Teflon sealant between headplate and cylinder joint. Assemble rotating seal – apply a light coating of oil to the O-ring and seal face. Then with flute side out install the rotating seat tight to the shaft sleeve. Check and record seal compression – With the seal body in place and the impeller against the opposite headplate, check that seal compression is adequate. This can be checked using a depth gauge or dial indicator from the face of the head plate to the face of the mating ring. First, measure this distance while the carbon is out at its full length. Then, push the mating ring back against its stop and measure it again. The difference between these measurements is the compression. This can be done easily with finger pressure as the spring force is only 10 lbs. The correct travel is given below (record actual compression on clearance sheets).

SEAL COMPRESSION

Frame	Minimum	Maximum
400	.047”	.097”
600	.108”	.151”

* Prior to to assembly, lightly coat the groove in the sleave(38) with slip plate. ROOTS™ P/N 813-314-000

6. Installation of bearings (14) – Heat bearing inner race to 300°F (149°C) in an oven or hot oil; then slide it onto the shaft so the bearing shoulder is snugly against the sleeve. Note: Be sure to install the shaft shim (70) behind the shaft sleeve before installing the drive end drive bearing inner race. This is required to compensate for the oil leader for shimming. Insert the bearing outer race and rollers in each bore and tap lightly in place. Spray bearings with lubricant.

7. Measure and record the end clearances between the impellers and drive headplate using long feeler gauges. Then, subtract the allowed average drive end clearance. See Table 6. The result is the space required between clamping plates (34) and bearing outer race. Place shims (10) as required to get this clearance. Then, fasten the clamping

plates to the headplate with capscrews (32) and lock washers (35).

8. Installation of gear end bearings (14) – Turn the blower so that the gear end headplates is up. Heat bearing inner race to 300°F (149°C) in an oven or hot oil; then slide it onto the shaft so that the bearing shoulder is snugly against the sleeve. Insert the bearing outer race and rollers in each bore and tap lightly into place.

9. Measure and record the end clearance between the impellers and gear end headplate, then subtract the allowed average gear end clearance. See Table 6. The result is the space required between clamping plate (54) and bearing outer race. Place shims (10) as required to get this clearance. Then fasten the clamping plates (54) to the headplate using capscrews (32) and lock washers (35). Do not install wavy-spring washers (29) at this time, as a final check of clearances is required first.

10. Final check of end clearances and float – Using long feeler gauges, check the clearance between the impellers and drive end headplate. See Table 6. Place the blower assembly on its feet and correct shimming as required. Then, force the impellers as close to the gear end headplate as possible, and check the clearance between impellers and gear end headplate for agreement with Table 6. Adjust shimming on the gear end as required. With unit securely fastened down, use a dial indicator to measure the impeller float. Again push the impeller to one end of the cylinder. With indicator firmly mounted, place contact point on the end of the shaft just pushed and set dial on zero. Force the impeller to the opposite end (toward indicator). Indicator reading will be a measurement of the impeller float. Repeat process on second impeller and compare float to Table 6. Adjust shimming at bearing clamp plates to obtain both float and end clearances specified in Table 6.

    Finally, after clearances and float have been corrected and checked, remove the gear end clamping places (54) and install wavy-spring washers (29) and reinstall shims (10) and clamping plates (54). Be sure oil feed grooves are up and toward bearings.

11. Installing drive gear (4) – Be sure shafts and gear bores are clean and oil free with no scratches. Oil gear nut threads lightly. Place hardwood wedges as shown in Figure 8. Install gear (4) and nut (31) so match mark at the tooth is at the line of engagement. Tighten the drive gear to the torque given below. Blower assembly must be fastened down for torquing operation.

12. **Left side discharge machine**
    Installing driven gear (14) – Insert a long metal feeler gauge between the impellers' lobes at the fronts as shown in Table 6. Feeler gauge thickness to be a middle value from Table 6 for fronts.

13. **Right side discharge machine**
    Installing driven gear (4) – Insert a long metal feeler gauge between the impellers' lobes at the backs. Feeler gauge thickness to be minimum value from Table 6 for backs.

RAM™ SERIES BLOWER GEAR NUT TORQUE

Frame Size	Torque	
	lb.-ft.	(kg-m)
404, 406, 409, 412, 418	400	(56)
616, 624	630	(88)

RAM™ SERIES BLOWER OIL SLINGER SCREW TORQUE

Frame Size	Torque	
	lb.-ft.	(kg-m)
404, 406, 409, 412, 418	75	(10)
616, 624	140	(19)

Align the gear so the tooth match marks agree with the drive gear and install nuts (31). Tighten lightly with a small wrench, then check front and back clearances against Table 6 for each 45° position. Both fronts should be about the same and backs should about equal and be within the specified range in Table 6. Adjust gear position if necessary, then insert the corrected feeler gauge and wedges and use a torque wrench to tighten the gear nut to the torque specified above. Remove wedges and rotate the drive shaft by hand to make sure there are no gear tight spots or impeller contacts. **CAUTION: Keep fingers away from impeller end gears.**

Install slinger(s) (46),install gearbox (3) with gasket (7) and tighten the capscrews (75) evenly to 10 ft.-lbs. (1.3 kg-m).

Install drive end oil slinger (40) and capscrew (60), apply Locktite to threads and torque to value specified above.

Install drive end cover (5) and gasket (7) with drive lock pins (17) in place, being careful not to dent or scratch drive shaft lip seal surface. Tighten capscrews (75) evenly. Check seal bore for concentricity with shaft using an indicator; reposition drive lock pins, if necessary. Install seal (33) with lip facing inward, using care to avoid tearing or scratching seal on shaft keyway. Use a pressing tool with clean, square ends to insure correct positioning of the seal. For hydrodynamic style seals, the shaft rotation is critical for correct installation and proper sealing. Match the directional arrow shown on the seal faces with the required shaft rotation. An installation protective sleeve is required to protect seal lip during installation.

Install vent plug (21) in each headplate.

Replace oil drain plugs (22) and refill drive end and gear sumps with proper grade of oil as discussed under **LUBRICATION**.

Install drive sheave or coupling half and install blower, refer to **INSTALLATION instructions**.

FIGURE 2

ALLOWABLE OVERHUNG LOADS FOR V-BELT DRIVES UNIVERSAL RAI®/URAI™-J UNITS

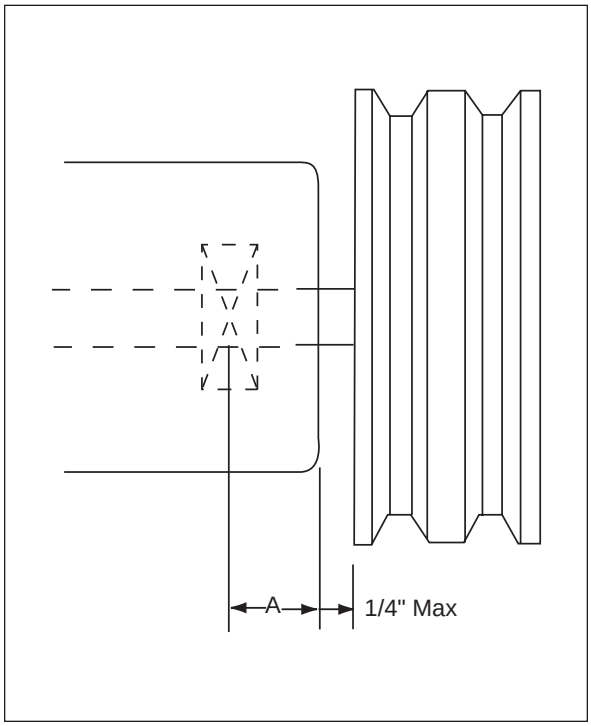

$$\text{Belt Pull lbs} = \frac{252100 \bullet \text{Motor HP}}{\text{Blower RPM} \bullet \text{Sheave Diameter}}$$

$$\text{Shaft Load (lb.in)} = \text{Belt Pull} \bullet \left(A + 1/4'' + \frac{\text{Sheave Width}}{2}\right)$$

Frame Size	Dimension "A"	Max Allowable Shaft Load (lb-in.)	Min Sheave Diameter
22, 24	0.61	130	4.00
32, 33, 36	0.80	350	5.00
42, 45, 47	1.02	525	5.00
53, 56, 59	1.13	1,325	6.00
65, 68, 615	1.36	2,250	8.00
76, 711, 718	1.16	2,525	9.50

NOTE:
Arc of sheave belt contact on the smaller sheave not to be less than 170°
Driver to be installed on the inlet side for vertical units, and on the drive shaft side for horizontal units.
ROOTS recommends 3V, 5V or 8V belts and sheaves.

ALLOWABLE OVERHUNG LOADS FOR V-BELT DRIVES 400 - 600 RAM™ UNITS

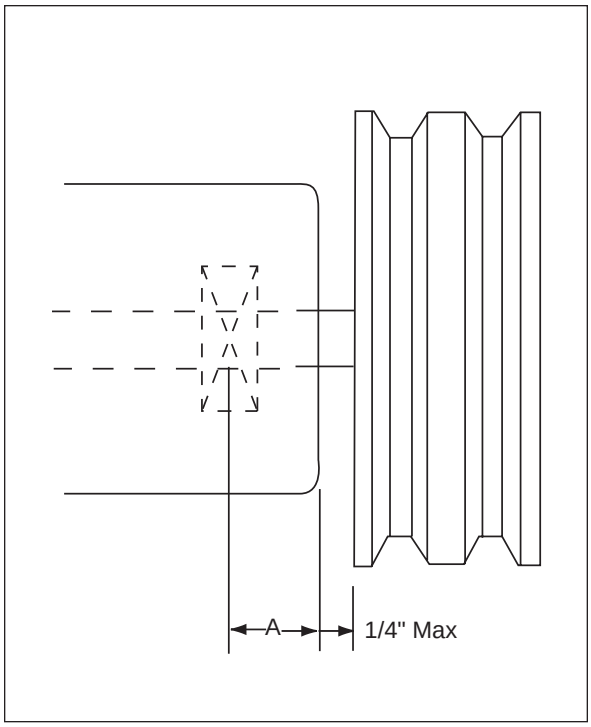

$$\text{Belt Pull lbs} = \frac{275000 \bullet \text{Motor HP}}{\text{Blower RPM} \bullet \text{Sheave Diameter}}$$

$$\text{Shaft Load (lb.in)} = \text{Belt Pull} \bullet \left(A + 1/4'' + \frac{\text{Sheave Width}}{2}\right)$$

	Dimension "A"			
Frame Size	Standard Unit	Bottom Drive or Double Shaft Seal	Max Allowable Shaft Load (lb-in.)	Min Sheave Diameter
404, 406	1.90	2.11	3,200	7.10
409, 412, 418	1.90	2.11	3,200	7.10
616, 624	2.11	2.67	7,975	8.50

NOTE:
Arc of sheave belt contact on the smaller sheave not to be less than 170°
Driver to be installed on the inlet side for vertical units, and on the drive shaft side for horizontal units.
ROOTS recommends 3V, 5V or 8V belts and sheaves.

FIGURE 3

AIR BLOWER INSTALLATION WITH ACCESSORIES

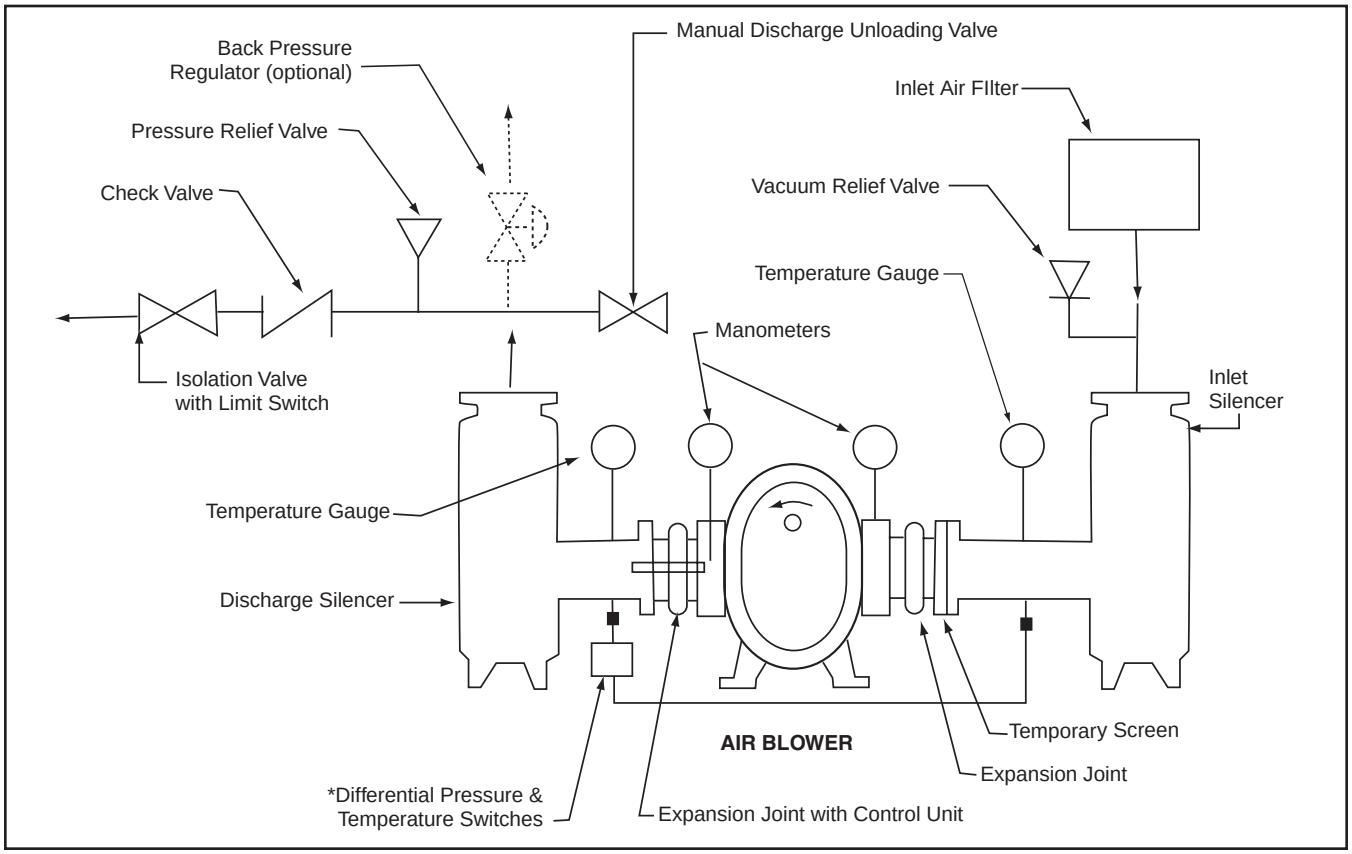

Above are suggested locations for available accessories.

GAS BLOWER INSTALLATION WITH ACCESSORIES

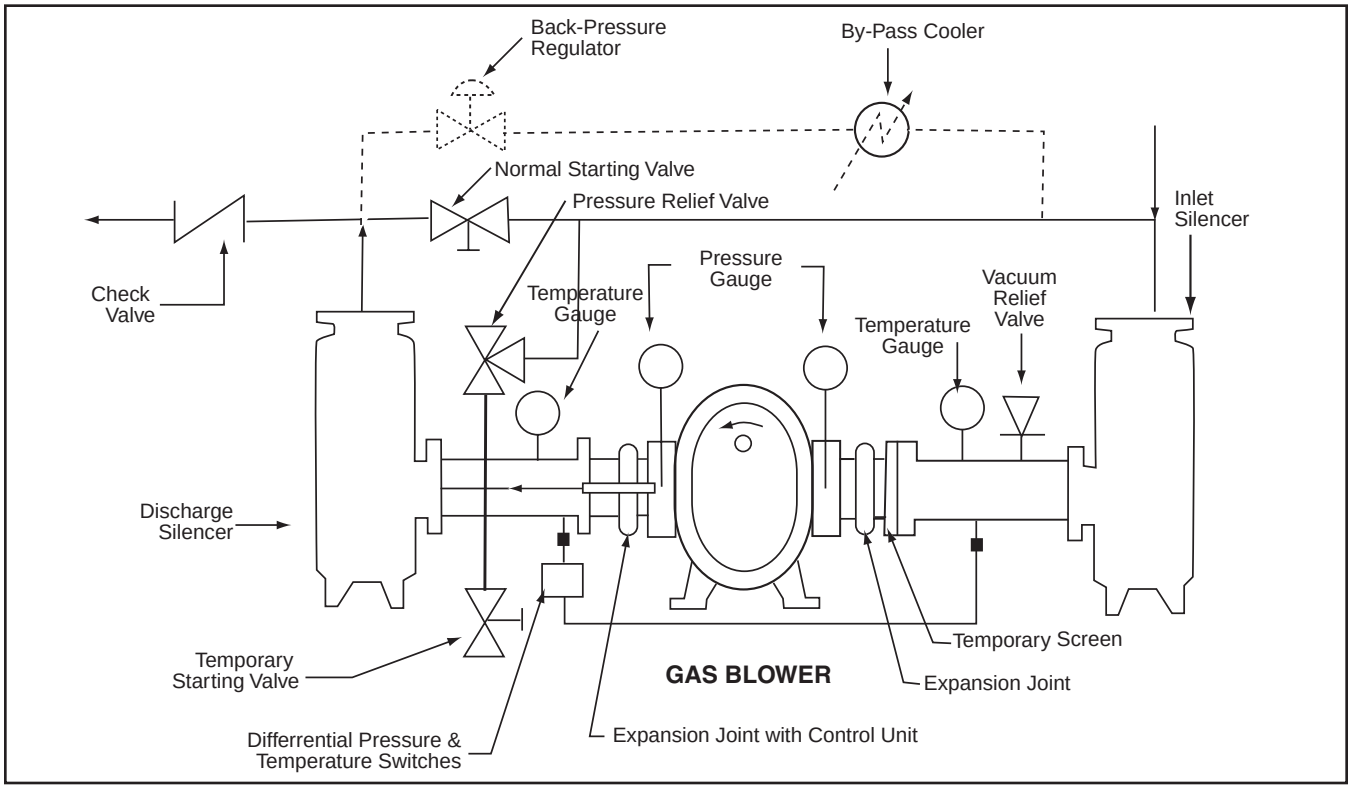

Above are suggested locations for available accessories.

FIGURE 4

BLOWER ORIENTATION CONVERSION

Model	Reversible Rotation	Whispair™ Design
Universal RAI	yes	no
URAI-J Whispair™	no	yes
URAI-G	yes	no
RAM	yes	no
RAM-J Whispair™	no	yes
RAM-GJ Whispair™	no	yes

Special Note: WHISPAIR™ models are designed to operate with only one shaft rotation direction to take full advantage of the Whispair feature. Therefore, a WHISPAIR™ blower may be operated in the following combinations.

- **CCW Rotation:** Bottom Shaft; Right side discharge or a Left Shaft; Bottom discharge
- **CCW Rotation:** Top Shaft; Left side discharge or a Right Shaft; Top discharge

or

- **CW Rotation:** Bottom Shaft; Left side discharge or a Right Shaft Bottom discharge
- **CW Rotation:** Top Shaft; Right side discharge or a Left Shaft Top discharge

BLOWER ORIENTATION AND LUBRICATION POINTS: GREASE LUBRICATED DRIVE END UNIVERSAL RAI® SERIES & URAI™-G GAS BLOWERS

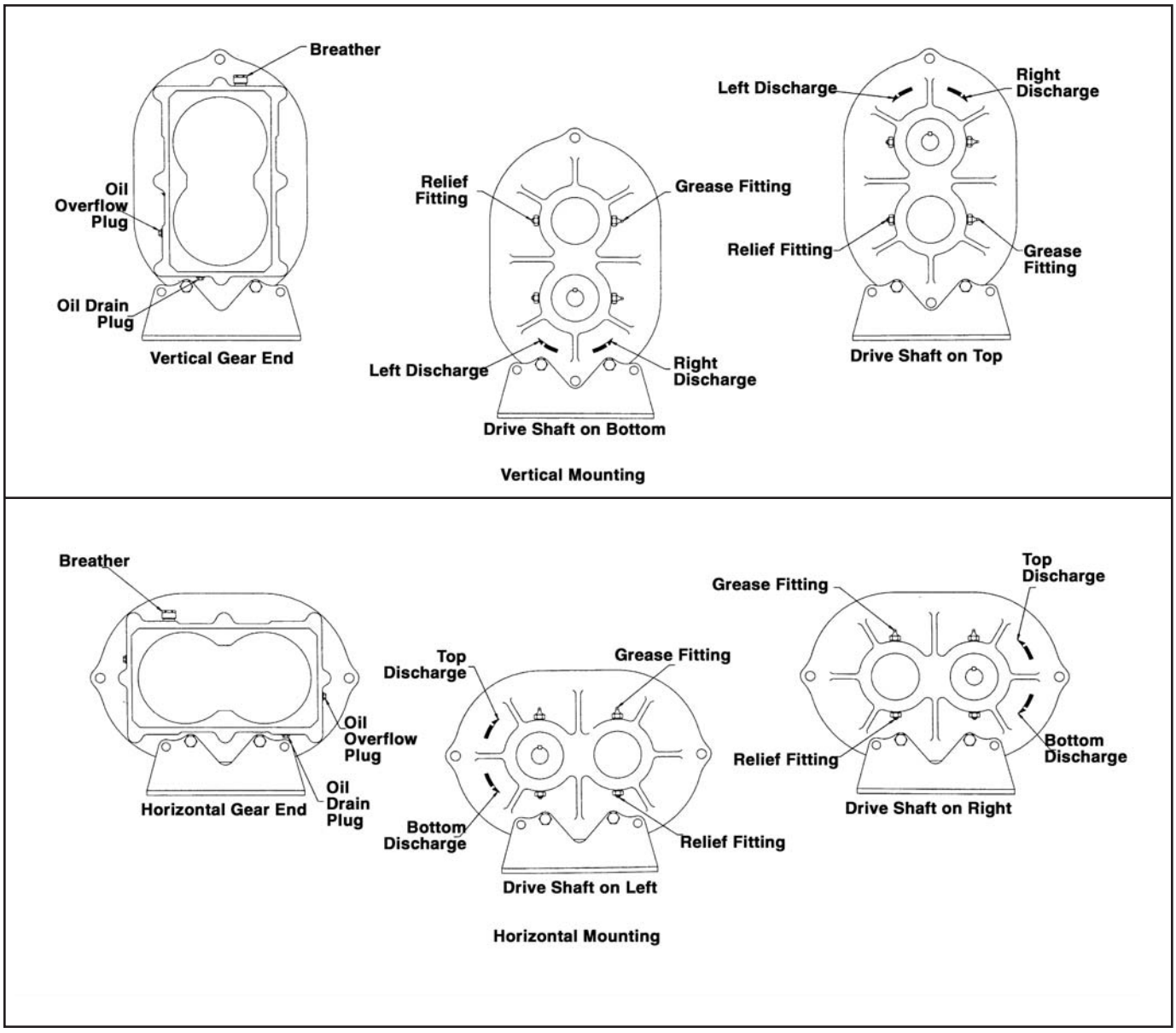

FIGURE 5

BLOWER ORIENTATION CONVERSION - WHISPAIR™ UNITS

1. STANDARD ARRANGEMENT (3-WAY UNIVERSAL)
   EXTERNAL SIGHT GLASSES (37) & BREATHERS (21) MUST BE RELOCATED AS SHOWN.
   FEET (76&77) & LIFTING LUGS (63) MUST BE RELOCATED AS SHOWN.

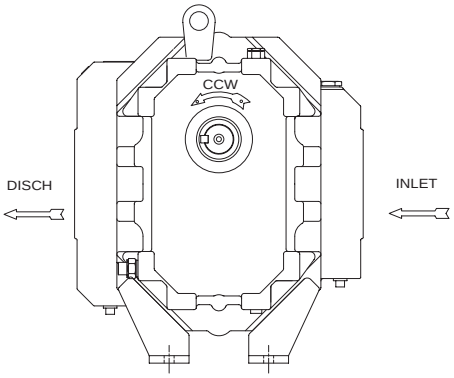

TOP DRV, L.S. DISCH

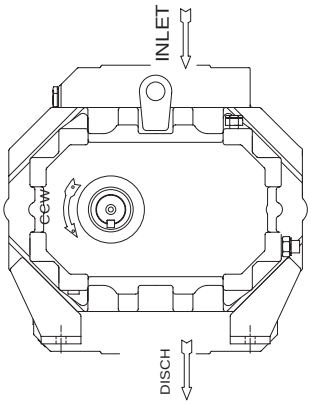

L.H. DRV, BTM DISCH

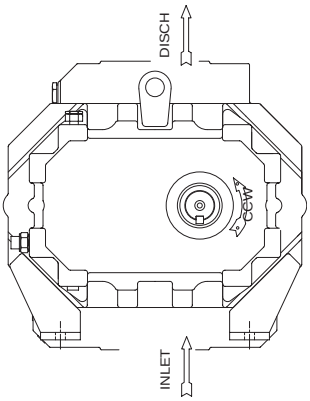

R.H. DRV, TOP DISCH

2. NON-STANDARD ARRANGEMENT (3-WAY UNIVERSAL)
   CYLINDER (11) MUST BE UNBOLTED FROM HEADPLATES (1) AND DISCHARGE RELOCATED AS SHOWN. **MUST HAVE AUTHORIZATION FOR CONVERSION SO NOT TO VOID WARRANTY.**
   EXTERNAL SIGHT GLASSES (37) & BREATHERS (21) MUST BE RELOCATED ALSO.
   FEET (76&77) & LIFTING LUGS (63) MUST BE RELOCATED AS SHOWN

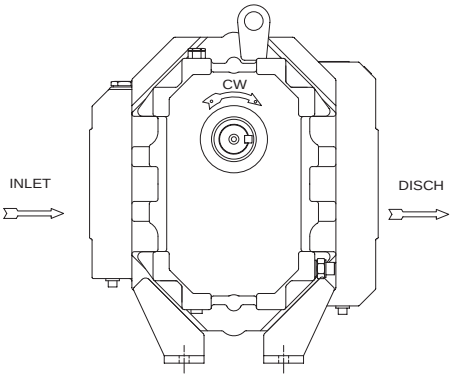

TOP DRV, R.S. DISCH

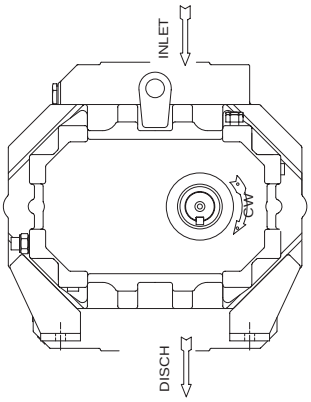

R.H. DRV, BTM DISCH

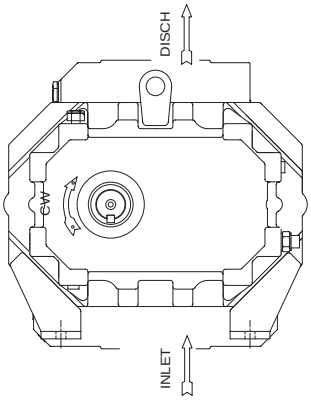

L.H. DRV, TOP DISCH

3. BOTTOM DRIVE SHAFT ARRANGEMENT "SPECIAL ORDER" (3-WAY UNIVERSAL)
   SPECIAL OGE OIL SLINGER REQUIRED FOR ASSEMBLY.
   MAY BE CONVERTED TO HORIZONTAL CONFIGURATION AS PREVIOUSLY SHOWN.

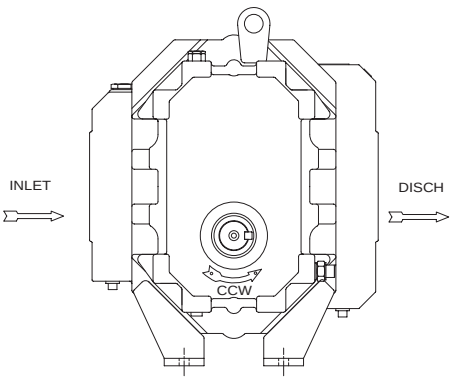

BTM DRV, R.S. DISCH

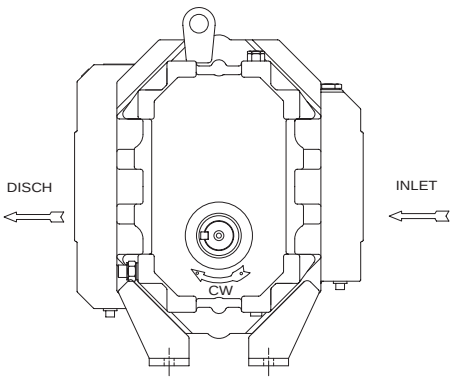

BTM DRV, L.S. DISCH

Drive End Breather Orientation for U-RAI series - DSL with Oil Lube

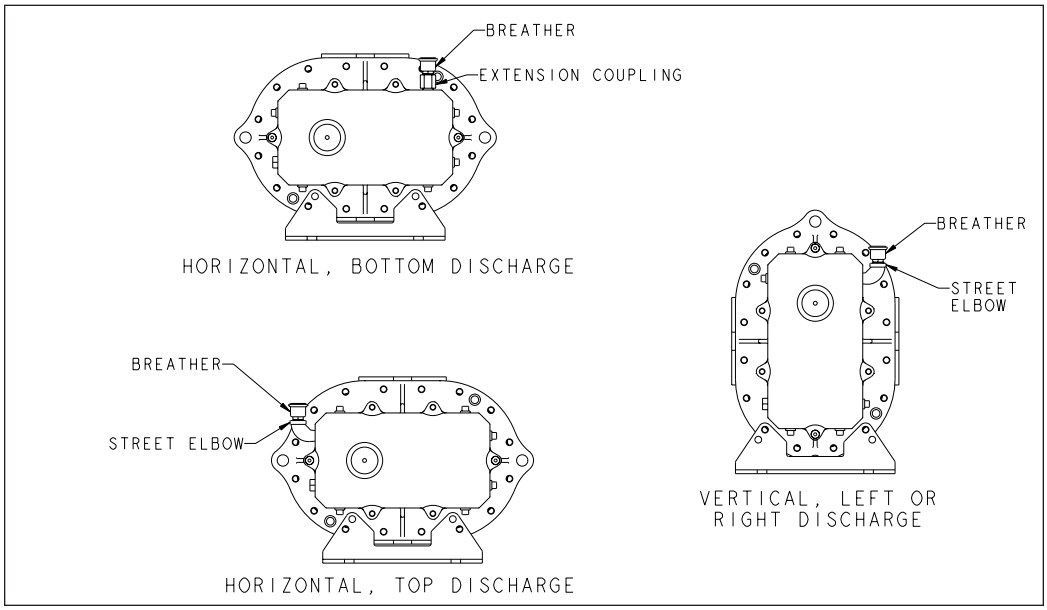

Table 1

Universal RAI® series & URAI™-G gas blower, Maximum Allowable Operating Conditions

Frame Size	Gear Diameter (Inch)	Speed RPM	Temp. Rise F°	(C°)	Delta Pressure PSI	(mbar)	Inlet Vacuum INHG	(mbar)
22	2.5	5275	225	(125)	12	(227)	15	(500)
24	2.5	5275	210	(117)	7	(483)	15	(500)
32	3.5	3600	240	(133)	15	1034	16	(539)
33	3.5	3600	225	(125)	12	(827)	15	(500)
36	3.5	3600	225	(125)	7	(483)	15	(500)
42	4.0	3600	240	(133)	15	(1034)	16	(539)
45	4.0	3600	225	(125)	10	(690)	16	(539)
47	4.0	3600	225	(125)	7	(483)	15	(500)
53	5.0	2850	225	(125)	15	(1034)	16	(539)
56	5.0	2850	225	(125)	13	(896)	16	(539)
59	5.0	2850	225	(125)	7	(483)	15	(500)
65	6.0	2350	250	(130)	15	(1034)	16	(539)
68	6.0	2350	240	(133)	14	(965)	16	(539)
615	6.0	2350	130	(72)	7	(483)	12	(405)
76	7.0	2050	250	(139)	15	(1034)	16	(539)
711	7.0	2050	225	(125)	10	(690)	16	(539)
718	7.0	2050	130	(72)	6	(414)	12	(405)

RAM™, RAM™-J WHISPAIR™ blower, RAM™-GJ gas blower
Maximum Allowable Operating Conditions

Frame Size	Gear Diameter (Inch)	Speed RPM	Temp. Rise F°	(C°)	Delta Pressure PSI	(mbar)	Inlet Vacuum INHG	(mbar)
404	4.5	4000	240	(133)	18	(1241)	16	(539)
406	4.5	4000	240	(133)	18	(1241)	16	(539)
409	4.5	4000	240	(133)	18	(1241)	16	(539)
412	4.5	4000	240	(133)	15	(1034)	16	(539)
418	4.5	4000	240	(133)	10	(690)	16	(539)
616	6.0	3000	230	(128)	15	(1034)	16	(539)
624	6.0	3000	230	(128)	10	(690)	16	(539)

TABLE 2

RECOMMENDED OIL GRADES

Ambient Temperature °F (°C)	Viscosity Range SSU at 100°F	ISO No.	Approximate SAE No.
Above 90° (32°)	1000-1200	320	60
32° to 90° (0° to 32°)	700-1000	220	50
0° to 32° (-18° to 0°)	500-700	150	40
Below 0° (-18°)	300-500	100	30

Use a good grade of **industrial type** non-detergent, rust inhibiting, anti-foaming oil and of correct viscosity per Table 2. *ROOTS™ synthetic oil (ROOTS P/N 813-106-) is highly recommended. ROOTS™ does **NOT** recommend automotive type lubricants, as they are not formulated with the properties mentioned above.

TABLE 3

UNIVERSAL RAI®, URAI™-J, URAI™-G OIL SUMP CAPACITIES

Frame Size	Gear End Capacity Fl. Oz. (Liters)	
	Vertical	Horizontal
22	3.4 (.1)	6.1 (.18)
24	3.4 (.1)	6.1 (.18)
32	8.5 (.25)	16.0 (.47)
33	8.5 (.25)	16.0 (.47)
36	8.5 (.25)	16.0 (.47)
42	12.7 (.37)	22.8 (.67)
45	12.7 (.37)	22.8 (.67)
47	12.7 (.37)	22.8 (.67)
53	16.0 (.47)	27.6 (.82)
56	16.0 (.47)	27.6 (.82)
59	16.0 (.47)	27.6 (.82)
65	28.3 (.84)	52.1 (1.54)
68	28.3 (.84)	52.1 (1.54)
615	28.3 (.84)	52.1 (1.54)
76	32.3 (.96)	59.5 (1.76)
711	32.3 (.96)	59.5 (1.76)
718	32.3 (.96)	59.5 (1.76)

UNIVERSAL URAI® SERIES-DSL WITH SPLASH LUBRICATED DRIVE END

Frame Size	Drive End Capacity Fl. Oz. (Liters)	
	Vertical	Horizontal
22	N/A	N/A
24	N/A	N/A
32	4.0 (.12)	6.5 (.19)
33	4.0 (.12)	6.5 (.19)
36	4.0 (.12)	6.5 (.19)
42	5.5 (.16)	10.8 (.32)
45	5.5 (.16)	10.8 (.32)
47	5.5 (.16)	10.8 (.32)
53	7.5 (.22)	14.8 (.44)
56	7.5 (.22)	14.8 (.44))
59	7.5 (.22)	14.8 (.44)
65	16 (0.47)	31 (0.91)
68	16 (0.47)	31 (0.91)
615	16 (0.47)	31 (0.91)
76	N/A	N/A
711	N/A	N/A
718	N/A	N/A

RAM™, RAM™-J & RAM™-GJ OIL SUMP CAPACITIES

Orientation	Gearbox		Drive End	
	Fl. Oz.	(Liters)	Fl. Oz.	(Liters)
400 (Horizontal)	36	1.06	19	.56
400 (Vertical)	18	.52	9	.27
600 (Horizontal)	95	2.81	50	1.48
600 (Vertical)	55	1.63	28	0.83

TABLE 4

UNIVERSAL URAI® SERIES WITH GREASE LUBRICATED DRIVE END: SUGGESTED BEARING GREASING INTERVALS

Speed In RPM	Operating Hours Per Day		
	8	16	24
	Greasing Intervals in Weeks		
750-1000	7	4	2
1000-1500	5	2	1
1500-2000	4	2	1
2000-2500	3	1	1
2500-3000	2	1	1
3000 and up	1	1	1

When servicing drive end bearings, use a NLGI #2 premium grade aluminum complex* grease with 300°F (149°C) service temperature and moisture resistance and good mechanical stability. Using a pressure gun, slowly force new lubricant into each drive end bearing housing until traces of clean grease comes out ofthe relief fitting.

NOTE: Lithium based greases are not compatible with the ROOTS™ synthetic grease used during manufacturing.

TABLE 5

NORMAL CLEARANCES FOR UNIVERSAL RAI® SERIES AND URAI™-G BLOWERS - INCHES (MM)

Frame Size	Impeller Ends			Cylinder		Impeller
	Total	Drive End Minimum	Gear End Minimum	Inlet & Discharge	Center Center	* Fronts/Backs
22	.006/.010 (.15-.25)	.003 (.08)	.003 (.08)	.004/.005 (.10-.13)	.002/.003 (.05-.08)	.007/.01 (.18-.25)
24	.006/.010 (.15-.25)	.003 (.08)	.003 (.08)	.004/.006 (.10-.15)	.002/.003 (.05-.08)	.007/.01 (.18-.25)
32	.006/.011 (.15-.28)	.003 (.08)	.003 (.08)	.004/.006 (.10-.15)	.002/.003 (.05-.08)	.01/.012 (.25-.30)
33	.006/.011 (.15-.28)	.003 (.08)	.003 (.08)	.004/.006 (.10-.15)	.002/.003 (.05-.08)	.01/.012 (.25-.30)
36	.006/.011 (.15-.28)	.003 (.08)	.003 (.08)	.004/.006 (.10-.15)	.002/.003 (.05-.08)	.01/.012 (.25-.30)
42	.008/.011 (.20-.28)	.004 (.10)	.004 (.10)	.005/.007 (.13-.18)	.003/.004 (.08-.10)	.009/.012 (.23-.30)
45	.008/.013 (.20-.33)	.004 (.10)	.004 (.10)	.005/.007 (.13-.18)	.003/.004 (.08-.10)	.012/.015 (.30-.38)
47	.008/.013 (.20-.33)	.004 (.10)	.004 (.10)	.005/.007 (.13-.18)	.003/.004 (.08-.10)	.012/.015 (.30-.38)
53	.008/.011 (.20-.28)	.004 (.10)	.004 (.10)	.005/.008 (.13-.20)	.003/.004 (.08-.10)	.011/.013 (.28-.33)
56	.008/.013 (.20-.33)	.004 (.10)	.004 (.10)	.005/.008 (.13-.20)	.003/.004 (.08-.10)	.015/.017 (.38-.43)
59	.008/.013 (.20-.33)	.004 (.10)	.004 (.10)	.005/.008 (.13-.20)	.003/.004 (.08-.10)	.015/.017 (.38-.43)
65	.012/.016 (.30-.40)	.008 (.20)	.004 (.10)	.006/.008 (.15-.20)	.006/.008 (.15-.20)	.010/.014 (.25-.36)
68	.014/.018 (.36-.46)	.010 (.25)	.004 (.10)	.006/.008 (.15-.20)	.006/.008 (.15-.20)	.010/.014 (.25-.36)
615	.014/.018 (.36-.46)	.010 (.25)	.004 (.10)	.006/.008 (.15-.20)	.006/.008 (.15-.20)	.010/.014 (.25-.36)
76	.012/.016 (.30-.40)	.008 (.13)	.004 (.10)	.006/.008 (.15-.20)	.006/.008 (.15-.20)	.013/.015 (.33-.38)
711	.014/.018 (.36-.46)	.010 (.25)	.004 (.10)	.006/.008 (.15-.20)	.006/.008 (.15-.20)	.013/.015 (.33-.38)
718	.014/.018 (.36-.46)	.010 (.25)	.004 (.10)	.006/.008 (.15-.20)	.006/.008 (.15-.20)	.013/.015 (.33-.38)

*** IMPELLER TIMING FOR STANDARD ROTATION VIEWED FROM GEAR END**

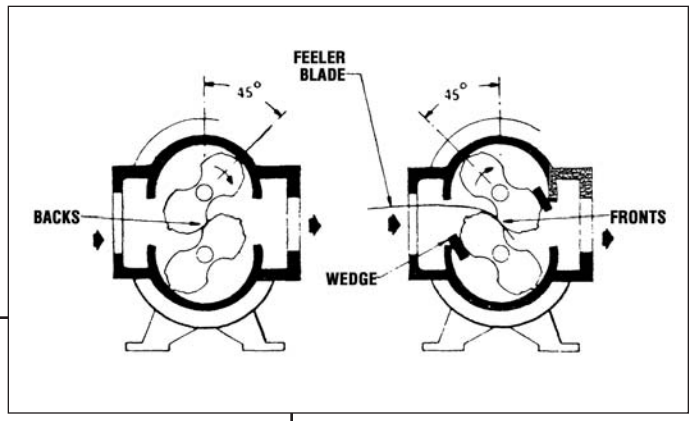

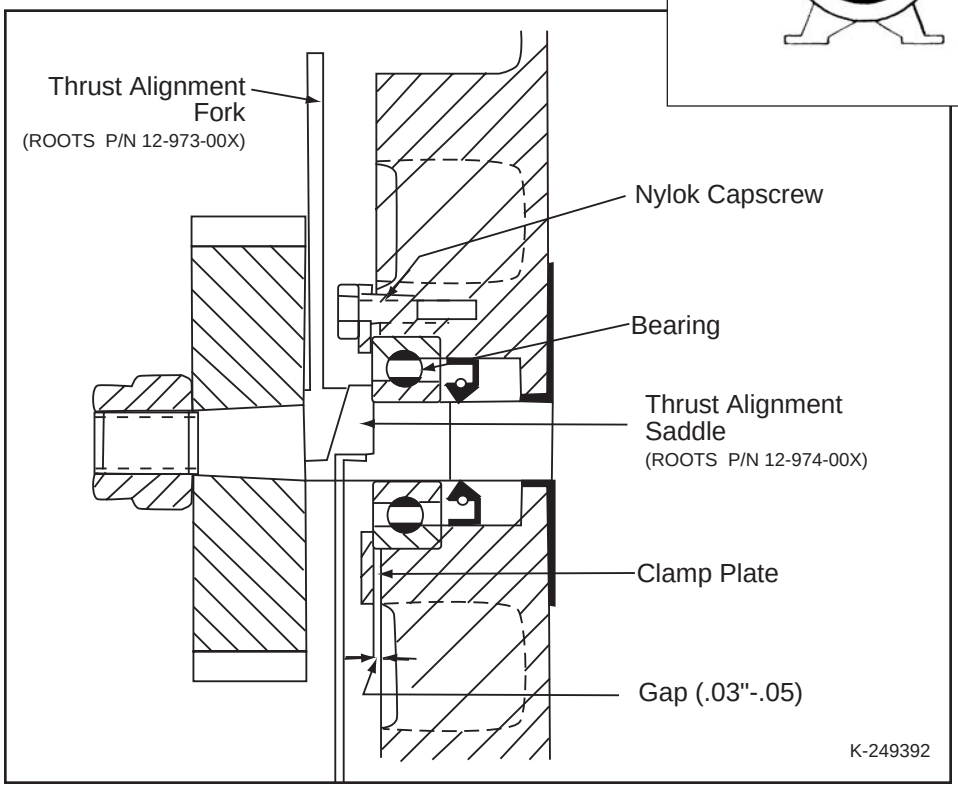

THRUST SETTING, 2-1/2" THRU 5" UNIVERSAL RAI® SERIES BLOWERS

TABLE 6

NORMAL CLEARANCES FOR RAM™-J & RAM™-GJ WHISPAIR™ BLOWERS - INCHES (MM)

Blower Frame Size	* Impeller Lobes at 45°		End Clearance			Impeller Tips to Cylinders		
	Fronts	Backs	Each End Without Wavy Spring	Gear End Without Spring Installed	Required End Float	Inlet	Center	Discharge
	Min-Max	Min-Max	Min-Max	Min-Max	Minimum	Min-Max	Min-Max	Min-Max
404	.012-.014	.006-.009	.003-.005	.003-.008	.003	.004-.006	.002-.004	.002-.004
	(.31-.36)	(.15-.23)	(.08-.13)	(.10-.15)	(.08-.20)	(.08)	(.05-.10)	(.05-.10)
406	.012-.014	.006-.009	.003-.005	.007-.012	.006	.005-.007	.003-.005	.002-.004
	(.31-.36)	(.15-.23)	(.08-.13)	(.15-.30)	(.13)	(.13-.18)	(.08-.13)	(.05-.10)
409	.013-.015	.006-.009	.003-.005	.013-.018	.008	.005-.007	.003-.005	.002-.004
	(.33-.38)	(.15-.23)	(.08-.13)	(.31-.43)	(.17)	(.13-.18)	(.08-.13)	(.05-.10)
412	.013-.015	.006-.009	.003-.005	.016-.021	.011	.006-.008	.004-.006	.004-.006
	(.33-.38)	(.15-.23)	(.08-.13)	(.36-.48)	(.28)	(.15-.20)	(.10-.15)	(.10-.15)
418	.013-.015	.006-.009	.003-.005	.022-.027	.017	.008-.010	.004-.006	.004-.006
	(.33-.38)	(.15-.23)	(.08-.13)	(.51-.64)	(.38)	(.20-.25)	(.10-.15)	(.10-.15)
616	.012-.014	.006-.008	.004-.006	.017-.022	.011	.009-.011	.004-.006	.002-.005
	(.31-.36)	(.15-.20)	(.10-.15)	(.38-.51)	(.28)	(.23-.28)	(.10-.15)	(.05-.13)
624	.012-.015	.006-.009	.004-.006	.024-.029	.018	.013-.015	.005-.007	.002-.005
	(.31-.36)	(.15-.23)	(.10-.15)	(.61-.74)	(.46)	(.33-.38)	(.13-.18)	(.05-.13)

NORMAL CLEARANCES FOR RAM™ BLOWERS - INCHES (MM)

Blower Frame Size	* Impeller Lobes at 45°		End Clearance			Impeller Tips to Cylinders		
	Fronts	Backs	Each End Without Wavy Spring	Gear End Without Spring Installed	Required End Float	Inlet	Center	Discharge
	Min-Max	Min-Max	Min-Max	Min-Max	Minimum	Min-Max	Min-Max	Min-Max
404	.009-.013	.009-.013	.003-.005	.003-.008	.003	.004-.006	.002-.004	.004-.006
	(.23-.33)	(.23-.33)	(.08-.13)	(.08-.20)	(.08)	(.10-.15)	(.05-.10)	(.10-.15)
406	.009-.013	.000-.013	.003-.005	.007-.012	.006	.005-.007	.003-.005	.005-.007
	(.23-.33)	(.23-.33)	(.08-.13)	(.15-.30)	(.13)	(.13-.18)	(.08-.13)	(.13-.18)
409	.010-.014	.010-.014	.003-.005	.013-.018	.008	.005-.007	.003-.005	.005-.007
	(.25-.36)	(.25-.36)	(.08-.13)	(.31-.43)	(.17)	(.13-.18)	(.08-.13)	(.13-.18)
412	.010-.014	.010-.014	.003-.005	.016-.021	.011	.006-.008	.004-.006	.006-.008
	(.25-.36)	(.25-.36)	(.08-.13)	(.36-.48)	(.28)	(.15-.20)	(.10-.15)	(.15-.20)
418	.010-.014	.010-.014	.003-.005	.022-.027	.017	.008-.010	.004-.006	.008-.010
	(.25-.36)	(.25-.36)	(.08-.13)	(.51-.64)	(.38)	(.20-.25)	(.10-.15)	(.20-.25)
616	.011-.013	.011-.013	.004-.006	.017-.022	.011	.009-.011	.004-.006	.009-.011
	(.28-.33)	(.28-.33)	(.10-.15)	(.38-.51)	(.28)	(.23-.28)	(.10-.15)	(.23-.28)
624	.011-.013	.011-.013	.004-.006	.024-.029	.018	.013-.015	.005-.007	.013-.015
	(.28-.33)	(.28-.33)	(.10-.15)	(.61-.74)	(.46)	(.33-.38)	(.13-.18)	(.33-.38)

* IMPELLER TIMING FOR STANDARD ROTATION VIEWED FROM GEAR END

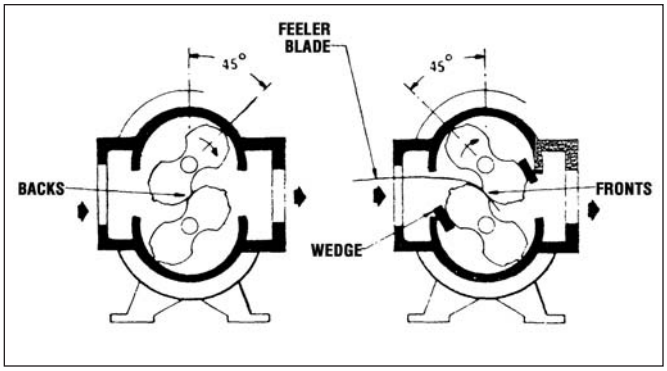

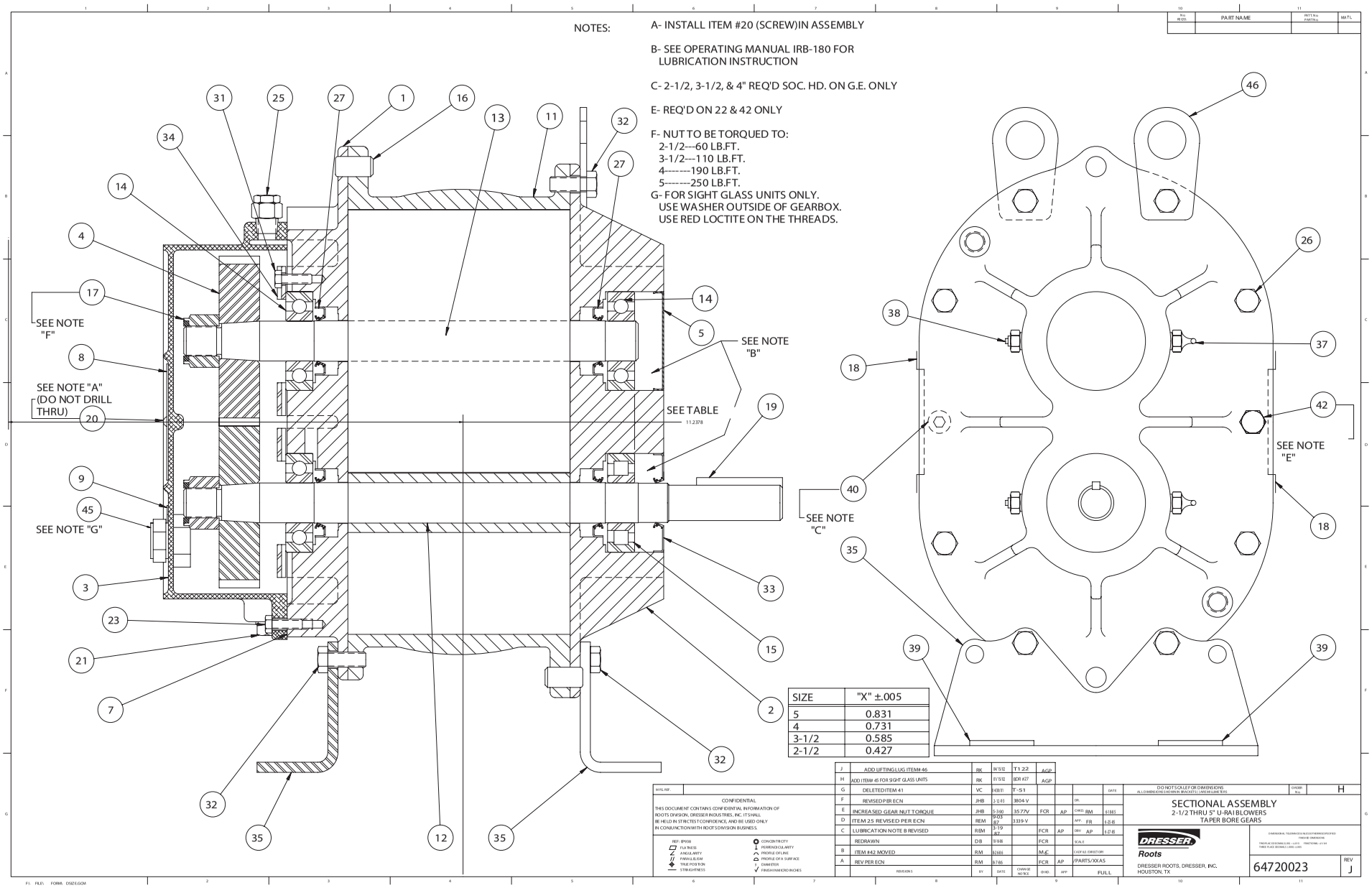

ASSEMBLY OF UNIVERSAL RAI® SERIES, AIR BLOWERS, 2-1/2" THRU 5" GEAR DIAMETER

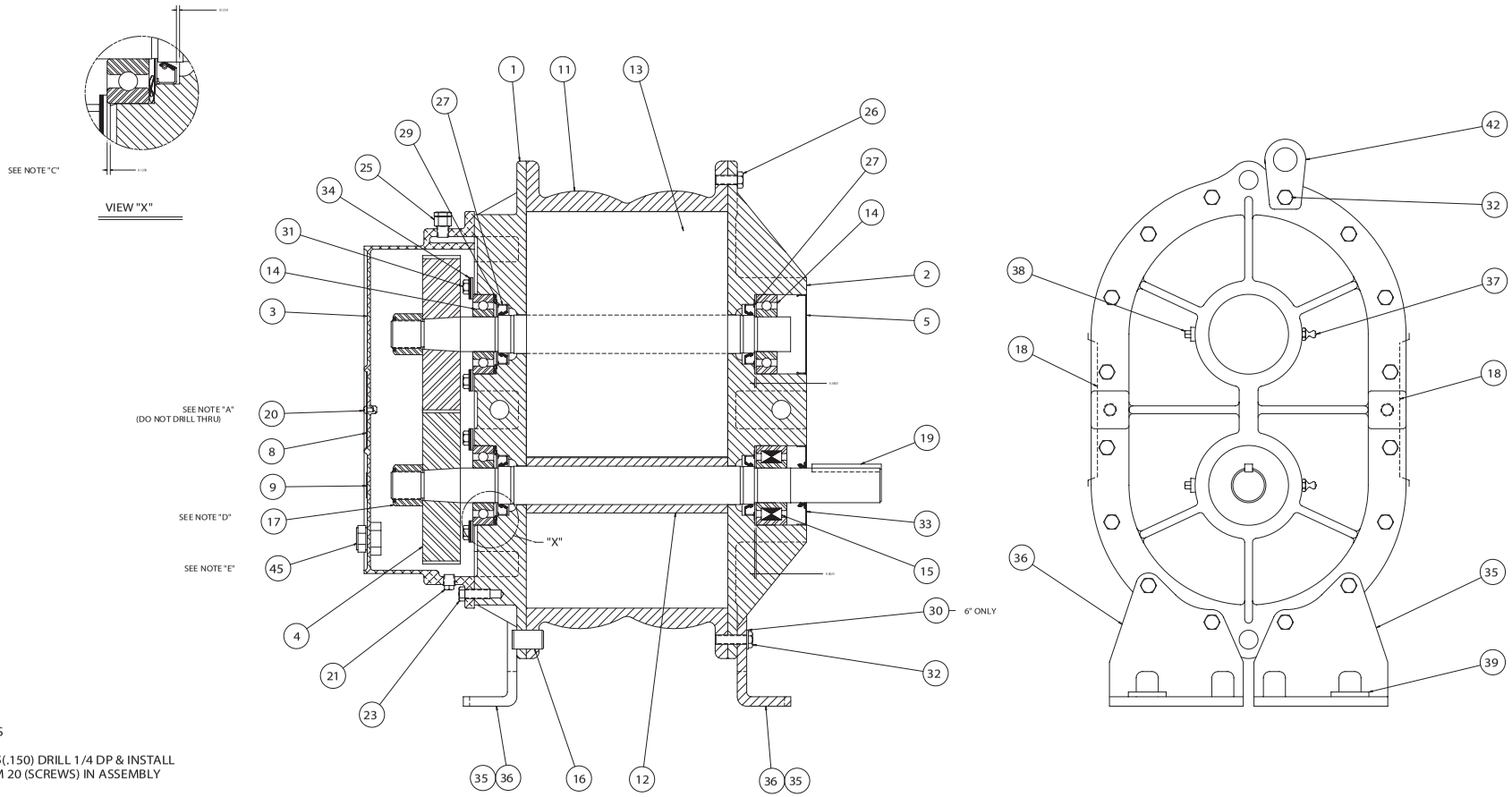

NOTES

A #25(.150) DRILL 1/4 DP & INSTALL ITEM 20 (SCREWS) IN ASSEMBLY

B SEE OPERATING MANUAL IRB-180 FOR LUBRICATION INSTRUCTION

C INSTALL BEARINGS AS SHOWN BEFORE SETTING END CLEARANCE

D NUT TO BE TORQUED TO:
6"---400 L.B. FT.
7"---550 L.B. FT.

E FOR SIGHT GLASS UNITS ONLY.
USE WASHER OUTSIDE OF GEARBOX.
USE RED LOCTITE ON THE THREADS.

No. REQ'D.	PART NAME	PATT No. FURN No.	MATL.

55-1242-2

MFG. REF. REF. 862-600-023

CONFIDENTIAL
THIS DOCUMENT CONTAINS CONFIDENTIAL INFORMATION OF ROOTS DIVISION, DRESSER INDUSTRIES, INC. IT SHALL BE HELD IN STRICTEST CONFIDENCE, AND BE USED ONLY IN CONJUNCTION WITH ROOTS DIVISION BUSINESS.

REF-EP038
FLATNESS
RUGOSITY
PARALLELISM
TRUE POSITION
STRAIGHTNESS
CONCENTRICITY
PERPENDICULARITY
PROFILE OF LINE
PROFILE OF A SURFACE
DIAMETER
FINISH IN MICROINCHES

	ORIGINAL LOST/REDRAWN ON CAD	DAC	4-21-1992						
E	IN CREASED GEAR NUT TORQUE	REM	1-8-1996	3577-V	FCR	AGP	DR. REM	12-8-1998	
D	REMOVED ITEM #43	REM	1-14-1998	3389-V			APP. FCR	3-12-1996	
C	ITEM 25 REVISED	REM	9-8-1993	3339-V		AGP	DRV. AP	8-8-1996	
B	ADDED ITEM #43	REM	3-19-1987				SCALE		
A	ADDED 7"	REM	2-23-1987				CAD FILE / DIRECTORY		
	REDRAWN	DB	11-21-1986				/PARTS/XXAS		
	REVISING	BY	DATE	CHANGE NOTICE	CHKD.	APP.	NTS		

DO NOT SCALE FOR DIMENSIONS
ALL DIMENSIONS ON DWG IN INCHES (") AND MILLIMETERS

CHKD BY
PL.

SECTIONAL ASSEMBLY
FOR 6" & 7" U-RAI BLOWER
WITH TAPER GEAR FIT

DRESSER Roots
DRESSER ROOTS, DRESSER, INC.
HOUSTON, TX

DIMENSIONAL TOLERANCES UNLESS OTHERWISE SPECIFIED
FINISH IN DIMENSIONS

DECIMALS ±0.030 ANGLES ±1 = ±0.10
FRACTIONS ±1/64 DECIMALS ±0.005 = ±0.001
FRACTIONAL ±1/64

64792023

REV F

F/: RLB. FORM: DSIZE.GCM

ASSEMBLY OF UNIVERSAL RAI® BLOWERS, 6" AND 7" DIAMETER

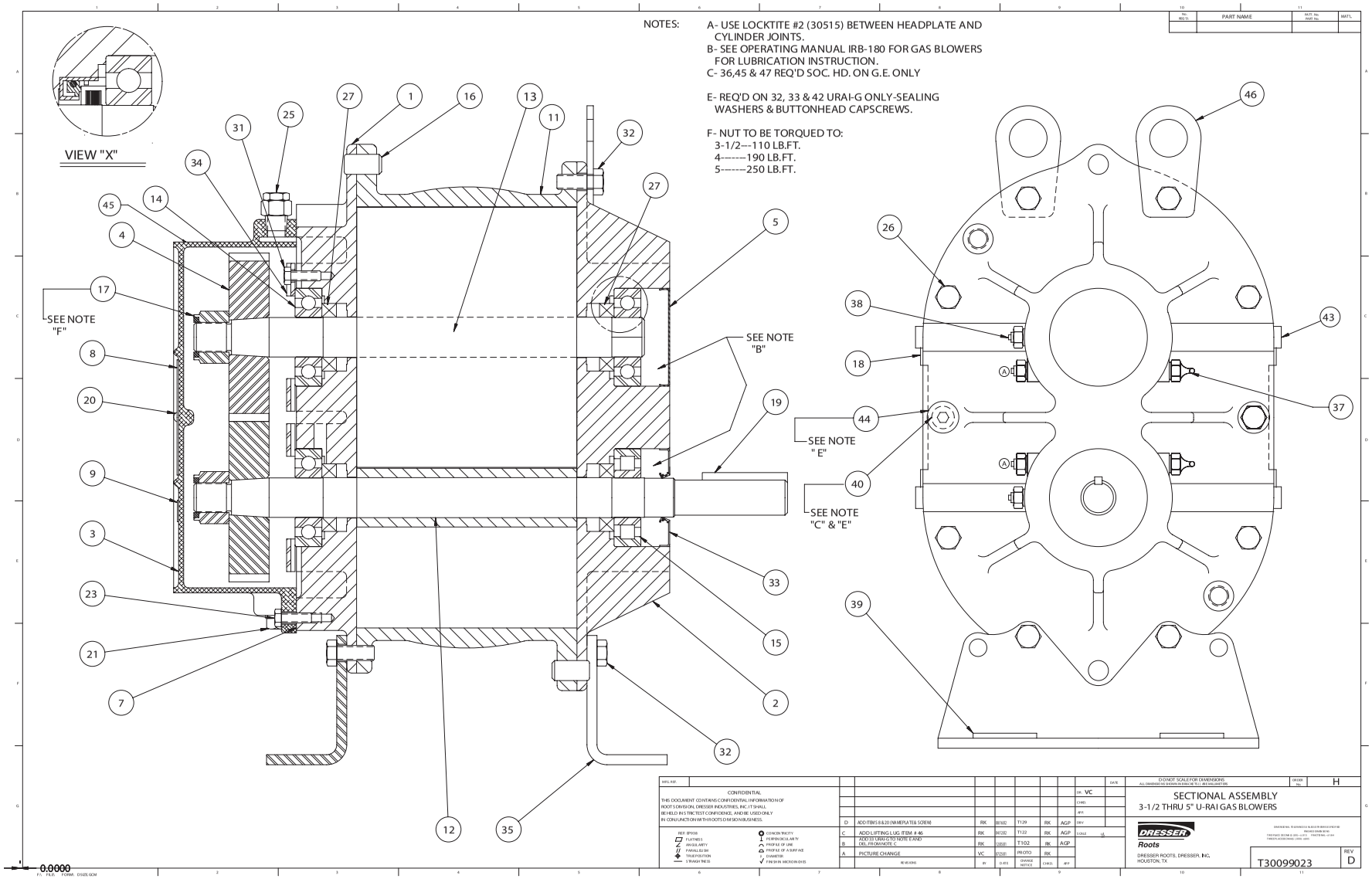

ASSEMBLY OF UNIVERSAL RAI™-G SERIES GAS BLOWERS, 3-1/2"THRU 5" GEAR DIAMETER

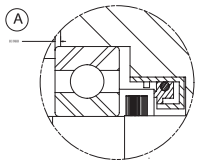

VIEW "X"

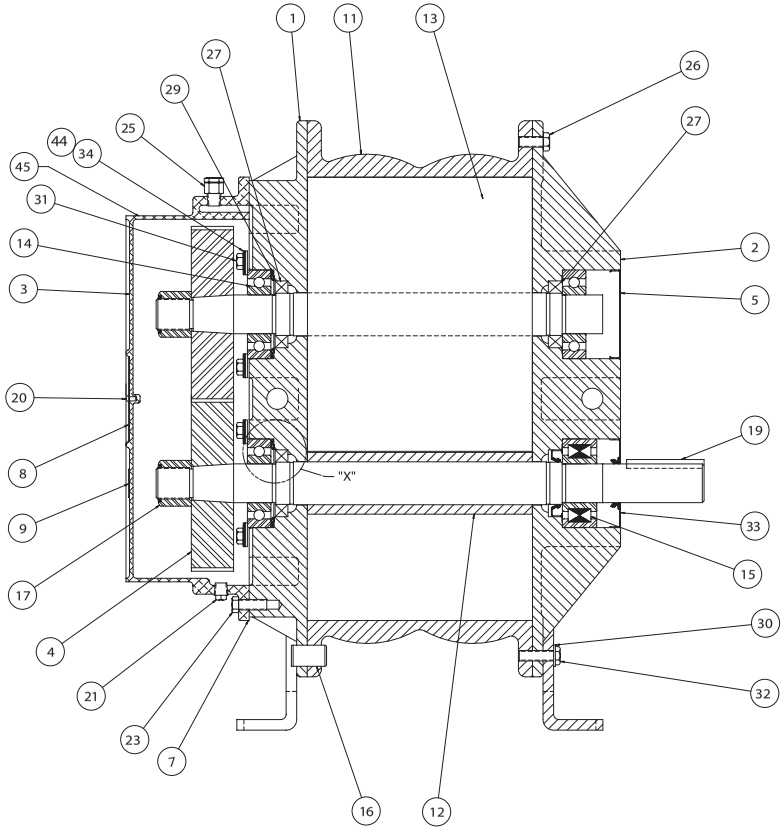

SEE NOTE "C"

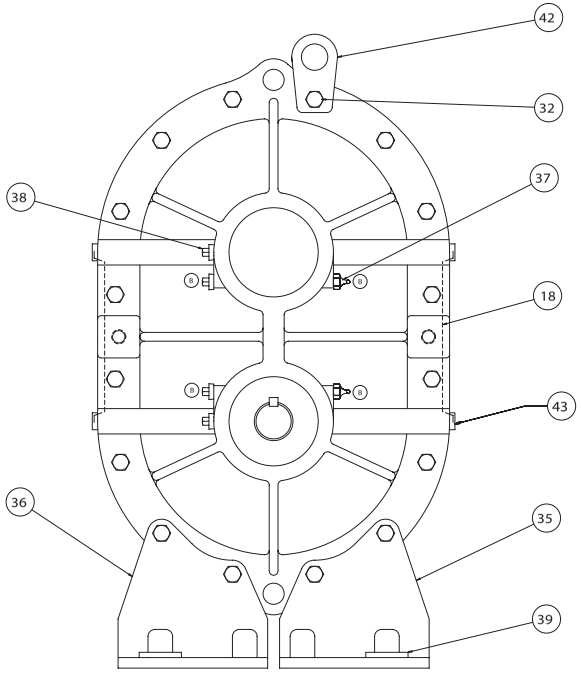

NOTES

A USE LOCKTITE #2 (30515) BETWEEN HEADPLATE AND CYLINDER JOINTS.

B SEE OPERATING MANUAL IRB-180 FOR LUBRICATION INSTRUCTION

C NUT TO BE TORQUED TO: 6"---400 LB. FT.

PART NAME	PART No. / PART No.	MATL.

MFG. REF. REF. 64792023

CONFIDENTIAL

THIS DOCUMENT CONTAINS CONFIDENTIAL INFORMATION OF ROOTS DIVISION, DRESSER INDUSTRIES, INC. IT SHALL BE HELD IN STRICTEST CONFIDENCE, AND BE USED ONLY IN CONJUNCTION WITH ROOTS DIVISION BUSINESS.

REF. EPXSR: FLATNESS, ANGULARITY, PARALLELISM, TRUE POSITION, STRAIGHTNESS, CONCENTRICITY, PERPENDICULARITY, PROFILE OF LINE, PROFILE OF A SURFACE, DIAMETER, FINISH IN MICROINCHES

REV	REVISIONS	BY	DATE	CHANGE NOTICE	CHKD	APP
C	ADD ITEMS # 18 & 20 (NAMEPLATE & SCREW)	RK	10/10/12	T129	RK	
B	PICTURE CHANGE	VC	07/25/11	PROTO	RK	
A	ADDED DIMENSION .066	VC	06/28/11	PROTO	RK	

DR. VC 07/12/11 · CHKD. · APP. · DRV. · SCALE NTS

DO NOT SCALE FOR DIMENSIONS
ALL DIMENSIONS SHOWN IN PARENTHESIS ( ) ARE MILLIMETERS

CHKD BY No.

SECTIONAL ASSEMBLY
FOR 6" U-RAI GAS BLOWERS

DRESSER Roots
DRESSER ROOTS, DRESSER, INC.
HOUSTON, TX

DIMENSIONAL TOLERANCE UNLESS OTHERWISE SPECIFIED
FRACTIONAL ±0.0625
TWO PLACE DECIMAL ±0.010 — ±0.010 THREE PLACE DECIMAL ±0.005 — ±0.005 FOUR PLACE DECIMAL ±0.0005 — ±0.0005

T30110023 REV B

F/S RLB FORM DSIZE.GCM

ASSEMBLY OF UNIVERSAL RAI® SERIES GAS BLOWERS, 6" GEAR DIAMETER

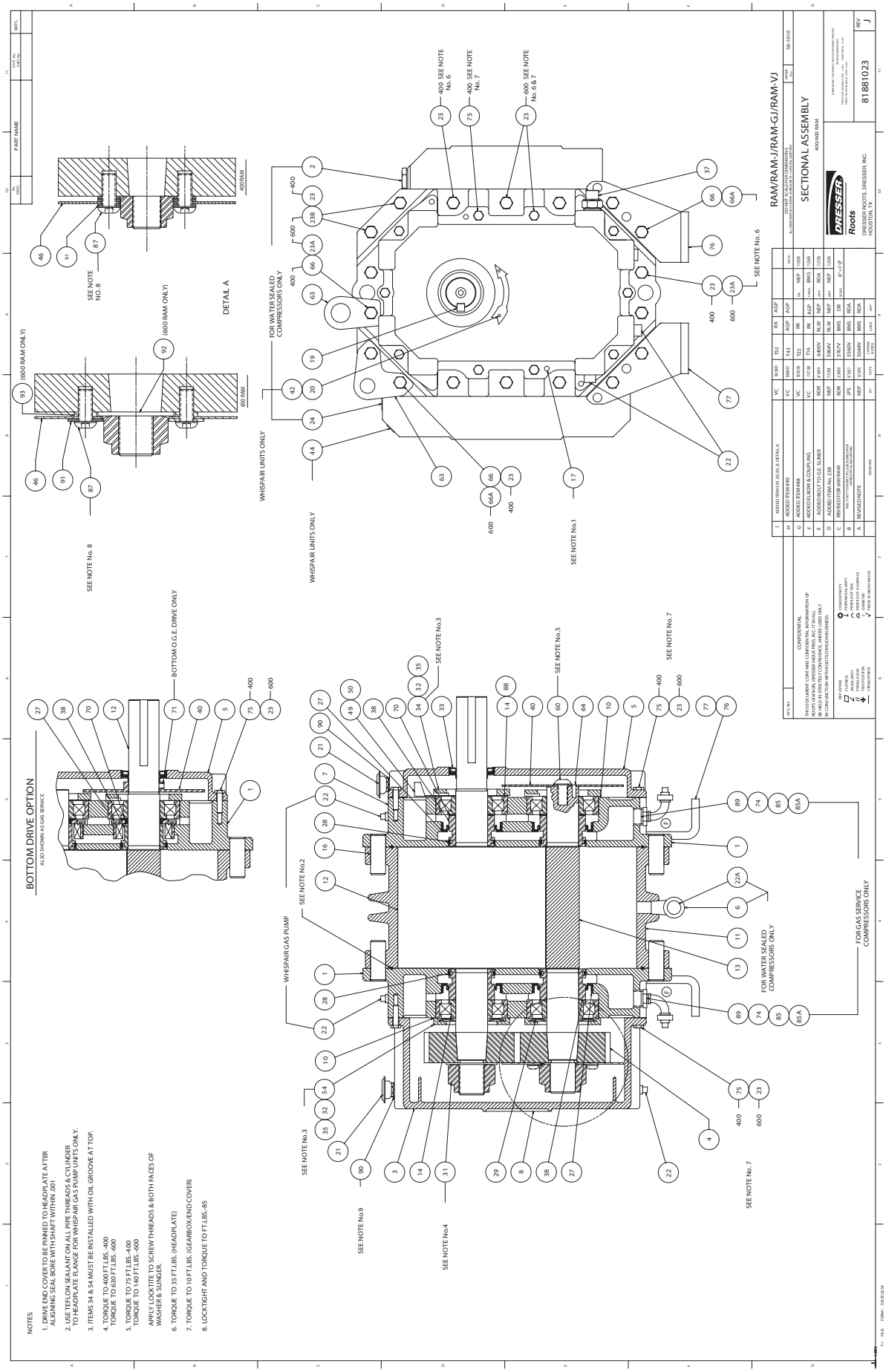

ASSEMBLY OF RAM™ SERIES AIR & GAS BLOWERS

UNIVERSAL RAI® SERIES BLOWERS PARTS LIST
2-1/2" – 5" GEAR DIAMETER
(Refer to drawing #64720023)

Item #	Part Name	Qty.
1	Headplate Gear End	1
2	Headplate Drive End	1
3	Gearbox	1
4	Timing Gears	2
5	Cover-Blind (Plug Opening)	1
7	Gasket, Gear Box	1
11	Cylinder	1
12	Impeller & Shaft Drive	1
13	Impeller & Shaft Driven	1
14	Bearing, Ball	3
15	Bearing, Roller	1
16	Pin, Dowel	4
17	Gear Nut	2
19	Key	1
21	Plug, Pipe	3
23	Screw Hex	6
25	Breather (Plug Vent)	1
26	Screw, Hex	*
27	Seal, Lip Bearing	4
31	Screw, Hex, Nylock	4
32	Screw, Hex	6
33	Seal Lip-Drive	1
34	Clamp Plate	2
35	Foot	2
37	Fitting, Grease	2
38	Fitting, Relief	2
39	Washer Mounting	4
40	Screw Socket	2
42	Screw Hex	2

*Quantities vary by blower.

UNIVERSAL RAI® SERIES BLOWERS PARTS LIST
6" & 7" GEAR DIAMETER
(Refer to drawing #64792023)

Item #	Part Name	Qty.
1	Headplate Gear End	1
2	Headplate Drive End	1
3	Gearbox	1
4	Timing Gears	2
5	Cover-Blind (Plug Opening)	1
7	Gasket, Gear Box	1
11	Cylinder	1
12	Impeller & Shaft Drive	1
13	Impeller & Shaft Driven	1
14	Bearing, Ball	3
15	Bearing, Roller	1
16	Pin, Dowel	4
17	Gear Nut	2
19	Key	1
21	Plug, Pipe	3
23	Screw Hex Nylock	8
25	Breather (Plug Vent)	1
26	Screw, Hex	*
27	Seal, Lip Bearing	4
31	Screw, Hex, Nylock	4
32	Screw, Hex	10
33	Seal Lip-Drive	1
34	Clamp Plate	2
35	Foot	2
37	Fitting, Grease	2
38	Fitting, Relief	2
39	Washer Mounting	4

*Quantities vary by blower.

UNIVERSAL RAI®-DSL SERIES BLOWERS PARTS LIST
3-1/2" – 5" GEAR DIAMETER
(Refer to drawing #T30356023)

Item #	Part Name	Qty.
1	Headplate Gear End	1
2	Headplate Drive End	1
3	Gearbox	1
4	Timing Gears	2
7	Gasket, Gear Box	1
11	Cylinder	1
12	Impeller & Shaft Drive	1
13	Impeller & Shaft Driven	1
14	Bearing, Ball	3
15	Bearing, Roller	1
16	Pin, Dowel	4
17	Gear Nut	2
19	Key	1
21	Plug, Pipe	3
23	Screw Hex	6
25	Breather (Plug Vent)	1
26	Screw, Hex	*
27	Seal, Lip Bearing	4
31	Screw, Hex, Nylock	4
32	Screw, Hex	6
33	Seal Lip-Drive	1
34	Clamp Plate	2
35	Foot	2
39	Washer Mounting	4
40	Screw Socket	2
42	Screw Hex	2
48	DE Oil Slinger Set Screw	4
50	Drive End Cover	1
52	Drive End Oil Slinger	2

*Quantities vary by blower.

UNIVERSAL RAI®-DSL SERIES BLOWERS PARTS LIST
6" GEAR DIAMETER
(Refer to drawing #T30383023)

Item #	Part Name	Qty.
1	Headplate Gear End	1
2	Headplate Drive End	1
3	Gearbox	1
4	Timing Gears	2
7	Gasket, Gear Box	1
11	Cylinder	1
12	Impeller & Shaft Drive	1
13	Impeller & Shaft Driven	1
14	Bearing, Ball	3
15	Bearing, Roller	1
16	Pin, Dowel	4
17	Gear Nut	2
19	Key	1

Item #	Part Name	Qty.
21	Plug, Pipe	3
23	Screw Hex Nylock	8
25	Breather (Plug Vent)	1
26	Screw, Hex	*
27	Seal, Lip Bearing	4
31	Screw, Hex, Nylock	4
32	Screw, Hex	10
33	Seal Lip-Drive	1
34	Clamp Plate	2
35	Foot	2
39	Washer Mounting	4
48	DE Oil Slinger Set Screw	4
50	Drive End Cover	1
52	Drive End Oil Slinger	2

*Quantities vary by blower.

UNIVERSAL RAI® SERIES GAS BLOWERS PARTS LIST 3-1/2" & 5" GEAR DIAMETER

(Refer to drawing #t30099023)

Item #	Part Name	Qty.
1	Headplate Gear End	1
2	Headplate Drive End	1
3	Gearbox	1
4	Timing Gears	2
5	Cover-Blind (Plug Opening)	1
7	Gasket, Gear Box	1
11	Cylinder	1
12	Impeller & Shaft Drive	1
13	Impeller & Shaft Driven	1
14	Bearing, Ball	3
15	Bearing, Roller	1
16	Pin, Dowel	4
17	Gear Nut	2
19	Key	1
21	Plug, Pipe	3
23	Screw Hex	8
25	Breather (Plug Vent)	1
26	Screw, Hex	14*
27	Seal, Bearing	4
31	Screw, Hex	4
32	Screw, Hex	4
33	Seal Lip-Drive	1
34	Clamp Plate	2
35	Foot	2
37	Fitting, Grease	2
38	Fitting, Relief	2
39	Washer Mounting	4
40	Screw Socket	2
42	Screw Hex	2

*Quantities vary by blower.

UNIVERSAL RAI® SERIES GAS BLOWERS PARTS LIST 6" GEAR DIAMETER

(Refer to drawing #T3011023)

Item #	Part Name	Qty.
1	Headplate Gear End	1
2	Headplate Drive End	1
3	Gearbox	1
4	Timing Gears	2
5	Cover-Blind (Plug Opening)	1
7	Gasket, Gear Box	1
11	Cylinder	1
12	Impeller & Shaft Drive	1
13	Impeller & Shaft Driven	1
14	Bearing, Ball	3
15	Bearing, Roller	1
16	Pin, Dowel	4
17	Gear Nut	2
19	Key	1
21	Plug, Pipe	3
23	Screw Hex Nylock	8
25	Breather (Plug Vent)	1
26	Screw, Hex	14*
27	Seal, Bearing	4
31	Screw, Hex	4
32	Screw, Hex	10
33	Seal Lip-Drive	1
34	Clamp Plate	2
35	Foot	2
37	Fitting, Grease	2
38	Fitting, Relief	2
39	Washer Mounting	4
40	Screw Socket	2
42	Screw Hex	2
43	Plug	8

*Quantities vary by blower.

RAM™ SERIES PARTS LIST 4" & 6" GEAR DIAMETER

(Refer to drawing #81881023)

Item #	Part Name	Qty.
1	Headplate	2
3	Gearbox	1
4	Timing Gears	2
5	End Cover	1
7	Gasket – Gearbox/Cover	2
10	Shims-(.010)	Lot
11	Cylinder	1
12	Impeller & Shaft Drive	1
13	Impeller & Shaft Driven	1
14	Bearing Roller	4
16	Pin, Dowel (Pull Out)	4
17	Pin, Dowel	2
19	Key Square	1
21	Breather	2
22	Plug, Pipe	12
23	Screw, Cap Hex Hd.	*
27	Seal, Ben Binh.	4
28	Piston, Ring-Seal	4
29	Washer, Wavy Spring	2
31	Gear Nut	2
32	Scr, Cap Hex Hd.	16
33	Seal, Lip Drive	1
34	Brg. Clamp Plate - D. E.	2
35	Lock Washer - Spring	16
37	Sight Plug - Oil Level	2
38	Sleeve, Shaft	4
40	Slinger - D.E. (Top Drive)	1
46	Slinger - G.E. (Optional)	1
49	Oil Leader L/S	1
50	Oil, Leader-R/S	1
54	Brg Clamp Plate - G. E.	2
60	Screw, Cap Butt. HD.	1
64	Pin, Spring	1
66	Screw, Cap Hex HD.	*
66.1	Whispair, Spring Lock 3/8M	*
70	Shims D.E. Brg.	1
75	Screw, Cap - Hex HD.	*
76	Blower Foot - RH	2
77	Blower Foot - LH	2
85	Elb, Pipe-Black	2
85.1	Plug, Pipe	2
87	Scr, Cap BH	2
88	Anti Rotation Ball	4
90	BSHG-RDCG	2
91	Washer, Plain Flat	2
92	Washer, Plain Flat	2
93	Washer	2

*Quantity varies by blower.

SUGGESTED LUBRICANTS

ROOTS Synthetic Oil: ISO-VG-220 Grade

	Part Number
Quart	813-106-001
Gallon	813-106-002
Case (12 qts)	813-106-008

ROOTS Synthetic Oil: ISO-VG-320 Grade

Quart	813-106-004
Gallon	813-106-005
Case (12 qts)	813-106-007

ROOTS Synthetic Grease: NLGI #2

14.5 oz. Tube	T200019-001
5 Gallon Pail	T200019-003
Case (30 tubes)	T200019-002

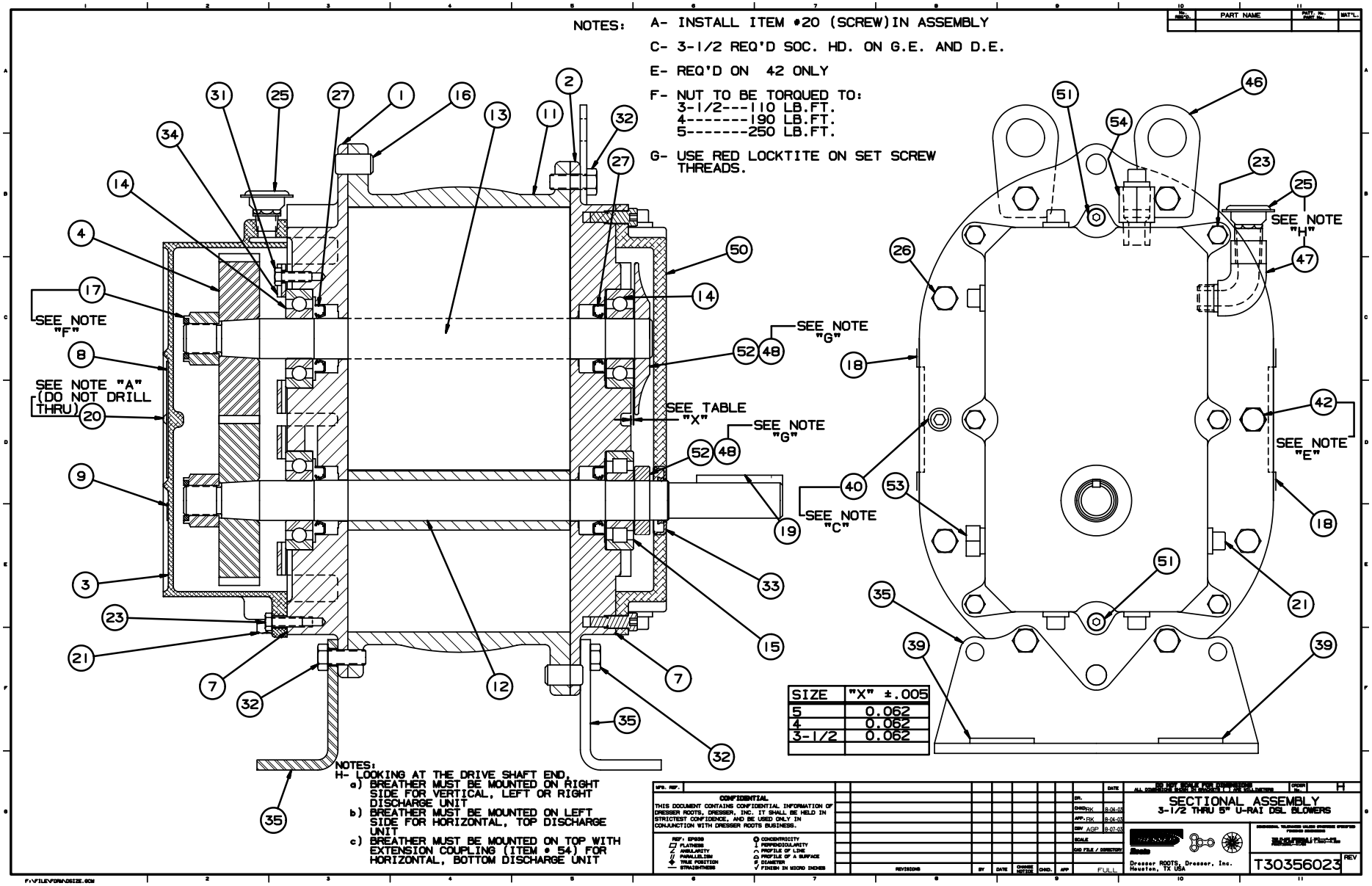

ASSEMBLY OF UNIVERSAL RAI® SERIES - DSL WITH SPLASH LUBRICATED DRIVE END 3-5" GEAR DIAMETER

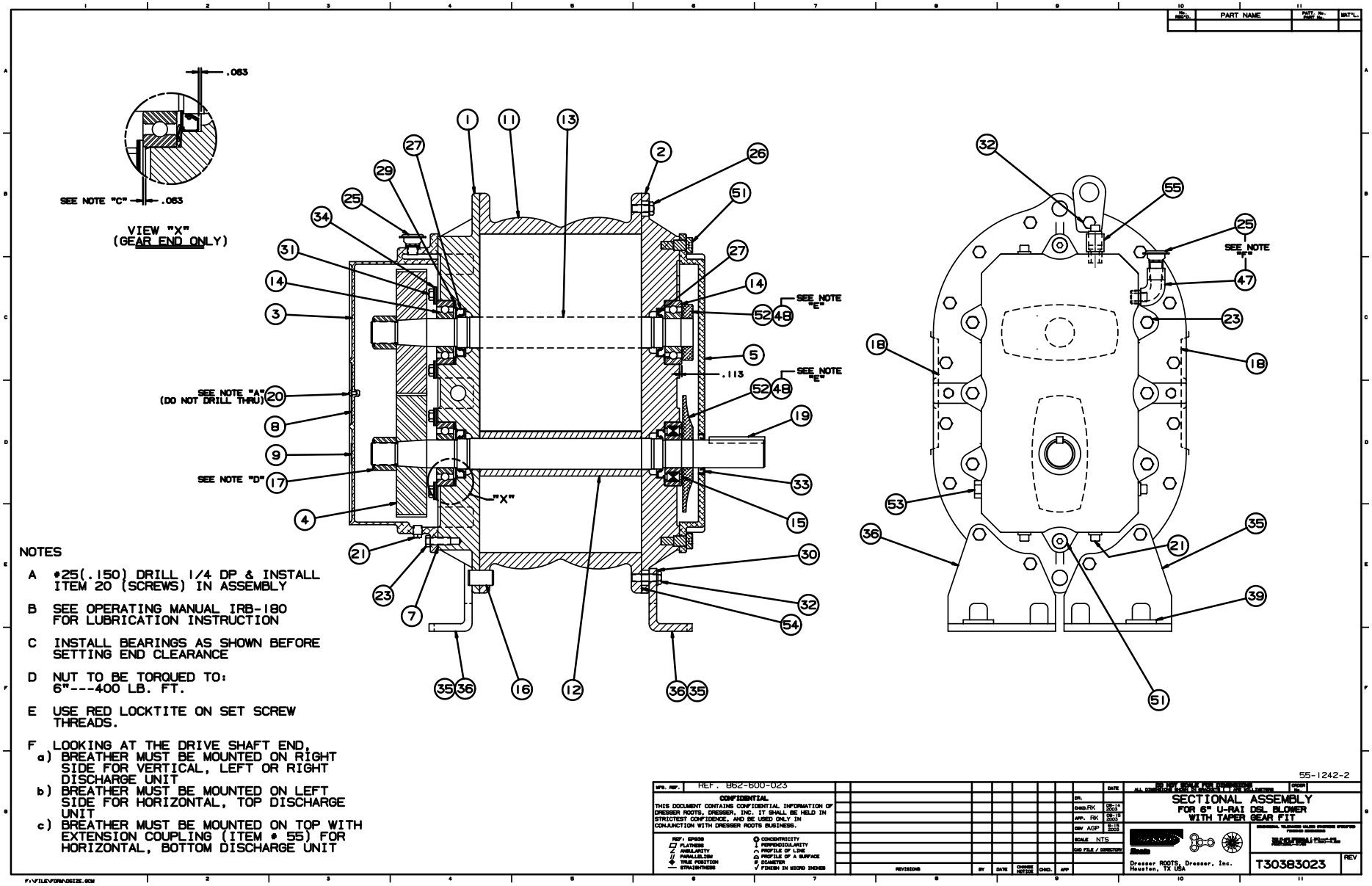

ASSEMBLY OF UNIVERSAL RAI® SERIES - DSL WITH SPLASH LUBRICATED DRIVE END 6" GEAR DIAMETER

CUSTOMER SERVICE

Dresser ROOTS
2135 Hwy 6 South
Houston, TX 77077
Toll Free Hot Line: 1-877-363-ROOT(S) (7668)
Toll Free Fax: 1-877-357-7238
Local Fax: 281-966-4309

ROOTS Factory Service & Repair Center
11611B Tanner RD
Houston, TX 77041
Toll Free: 1-800-866-6182
Local Phone: 713-896-4810
Local Fax: 713-896-4927

Service & Warranty
Toll Free: 1-800-866-6182
Local Phone: 832-467-4614
Local Fax: 713-896-4927

Dresser, Inc.

DRESSER®
Roots

Dresser ROOTS
2135 Hwy 6 South
Houston, TX 77077
PH: 281-966-4700
FX: 281-966-4309
Toll Free: 1-877-363-ROOT(S)

Dresser ROOTS - Connersville
900 West Mount Street
Connersville, IN 47331
PH: 765-827-9200
FX: 765-827-9266

Dresser ROOTS - Holmes Operation
PO Box B7
Off St. Andrews Rd
Turnbridge, Huddersfield
England HD1 6RB
PH: +44-1484-422222
FX: +44-1484-422668

website: www.rootsblower.com • email: ROOTS@dresser.com

IRB-180-102
Rev. 2.04

©2004 Dresser, Inc. all rights reserved.
ROOTS, RAM, URAI and WHISPAIR are trademarks of Dresser, Inc.
Dresser Design and Universal RAI are registered trademarks of Dresser, Inc.

CP PLUNGER PUMP SERVICE MANUAL

3CP MODELS: 3CP1120, 3CP1130, 3CP1140

5CP MODELS: 5CP2120W, 5CP2140WCS, 5CP2150W, 5CP3120, 5CP3120G1, 5CP3130G1, 5CP5120, 5CP5150G1, 5CP6120, 5CP6120G1, 5CP6140, 5CP6150

7CP MODELS: 7CP6170

INSTALLATION AND START-UP INFORMATION

Optimum performance of the pump is dependent upon the entire liquid system and will be obtained only with the proper selection, installation of plumbing, and operation of the pump and accessories.

SPECIFICATIONS: Maximum specifications refer to individual attributes. It is not implied that all maximums can be performed simultaneously. If more than one maximum is considered, check with your CAT PUMPS supplier to confirm the proper performance and pump selection. Refer to individual pump Data Sheet for complete specifications, parts list and exploded view.

LUBRICATION: Fill crankcase with special CAT PUMP oil per pump specifications (3CP-10 oz., 5CP-17 oz., 7CP-38 oz.). DO NOT RUN PUMP WITHOUT OIL IN CRANKCASE. Change initial fill after 50 hours running period. Thereafter, change oil every 3 months or 500 hour intervals. Additional lubrication may be required with increased hours of operation and temperature.

PUMP ROTATION: Pump was designed for forward rotation to allow optimum lubrication of the crosshead area. Reverse rotation is acceptable if the crankcase oil level is increased slightly above center dot to assure adequate lubrication.

PULLEY SELECTION: Select size of motor pulley required to deliver the desired flow from Horsepower Requirement and Pulley Selection Chart (refer to Tech Bulletin 003 or individual Data Sheet).

DRIVE SELECTION: The motor or engine driving the pump must be of adequate horsepower to maintain full RPM when the pump is under load. Select the electric motor from the Horsepower Requirement Chart according to required pump discharge flow, maximum pressure at the pump and drive losses of approximately 3-5%. Consult the manufacturer of gas or diesel engine for selection of the proper engine size.

MOUNTING: Mount the pump on a rigid, horizontal surface in a manner to permit drainage of crankcase oil. An uneven mounting surface will cause extensive damage to the pump base. To minimize piping stress, use appropriate flexible hose to inlet and discharge ports. Use the correct belt; make sure pulleys are aligned. Excessive belt tension may be harmful to the bearings. Hand rotate pump before starting to be certain shaft and bearings are free moving.

LOCATION: If the pump is used in extremely dirty or humid conditions, it is recommended pump be enclosed. Do not store or operate in excessively high temperature areas or without proper ventilation.

INLET CONDITIONS: Refer to complete Inlet Condition Check-List in this manual before starting system. DO NOT STARVE THE PUMP OR RUN DRY. Temperatures above 130°F are permissible. Add 1/2 PSI inlet pressure per each degree F over 130°F. Elastomer or RPM changes may be required. See Tech Bulletin 002 or call CAT PUMPS for recommendations.

C.A.T.: Installation of a C.A.T. (Captive Acceleration Tube) is recommended in applications with stressful inlet conditions such as high temperatures, booster pump feed, long inlet lines or quick closing valves.

DISCHARGE CONDITIONS: OPEN ALL VALVES BEFORE STARTING SYSTEM to avoid deadhead overpressure condition and severe damage to the pump or system.

Install a Pulsation Dampener on the discharge head or in the discharge line as close to the head as possible. Be certain the pulsation dampener (Prrrr-o-lator) is properly precharged for the system pressure (see individual Data Sheet).

A reliable Pressure Gauge should be installed near the discharge outlet of the high pressure manifold. This is extremely important for adjusting pressure regulating devices and also for proper sizing of the nozzle or restricting orifice. The pump is rated for a maximum pressure; this is the pressure which would be read at the discharge manifold of the pump, NOT AT THE GUN OR NOZZLE.

Use PTFE liquid (sparingly) or tape to connect accessories or plumbing. Exercise caution not to wrap tape beyond the last thread to avoid tape from becoming lodged in the pump or accessories. This condition will cause a malfunction of the pump or system.

PRESSURE REGULATION: All systems require both a primary pressure regulating device (i.e., regulator, unloader) and a secondary pressure safety relief device (i.e., pop-off valve, safety valve). The primary pressure device must be installed on the discharge side of the pump. The function of the primary pressure regulating device is to protect the pump from over pressurization, which can be caused by a plugged or closed off discharge line. Over pressurization can severely damage the pump, other system components and can cause bodily harm. The secondary safety relief device must be installed between the primary device and pump. This will ensure pressure relief of the system if the primary regulating device fails. Failure to install such a safety device will void the warranty on the pump.

When the high pressure system is left running with the trigger gun off, the by-pass liquid can be routed to drain or to the pump inlet. If routed to the pump inlet, the by-pass liquid can quickly develop excessive heat and result in damage to the pump. A THERMO VALVE installed in the by-pass line is recommended to protect the pump. An AUTO SHUT-OFF ASSEMBLY may also be used.

NOZZLES: A worn nozzle will result in loss of pressure. Do not adjust pressure regulating device to compensate. Replace nozzle and reset regulating device to system pressure.

PUMPED LIQUIDS: Some liquids may require a flush between operations or before storing. For pumping liquids other than water, contact your CAT PUMPS supplier.

STORING: For extended storing or between use in cold climates, drain all pumped liquids from pump and flush with antifreeze solution to prevent freezing and damage to the pump. DO NOT RUN PUMP WITH FROZEN LIQUID (refer to Tech Bulletin 063).

⚠ WARNING

All systems require both a primary pressure regulating device (i.e., regulator, unloader) and a secondary pressure safety relief device (i.e., pop-off valve, safety valve). Failure to install such relief devices could result in personal injury or damage to the pump or to system components. CAT PUMPS does not assume any liability or responsibility for the operation of a customer's high pressure system.

Products described hereon are covered by one or more of the following U.S. patents 3558244, 3652188, 3809508, 3920356, 3930756 and 5035580

World Headquarters
CAT PUMPS
1681-94th Lane N.E. Minneapolis, MN 55449-4324
Phone (763) 780-5440 — FAX (763) 780-2958
e-mail: techsupport@catpumps.com
www.catpumps.com

International Inquiries
FAX (763) 785-4329
e-mail: intlsales@catpumps.com

The Pumps with Nine Lives

CAT PUMPS (U.K.) LTD.
1 Fleet Business Park, Sandy Lane, Church Crookham, Fleet
Hampshire GU52 8BF, England
Phone Fleet 44 1252-622031 — Fax 44 1252-626655
e-mail: sales@catpumps.co.uk

N.V. CAT PUMPS INTERNATIONAL S.A.
Helvoldekens 6A, 2550 Kontich, Belgium
Phone 32-3-450.71.50 — Fax 32-3-450.71.51
e-mail: cpi@catpumps.be www.catpumps.be

CAT PUMPS DEUTSCHLAND GmbH
Buchwiese 2, D-65510 Idstein, Germany
Phone 49 6126-9303 0 — Fax 49 6126-9303 33
e-mail: catpumps@t-online.de www.catpumps.de

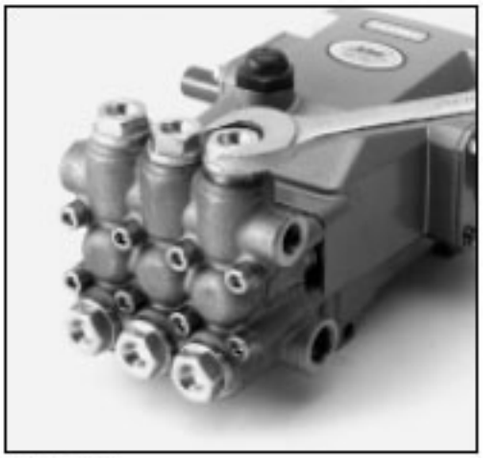

All Models
Removal of Valve Plugs

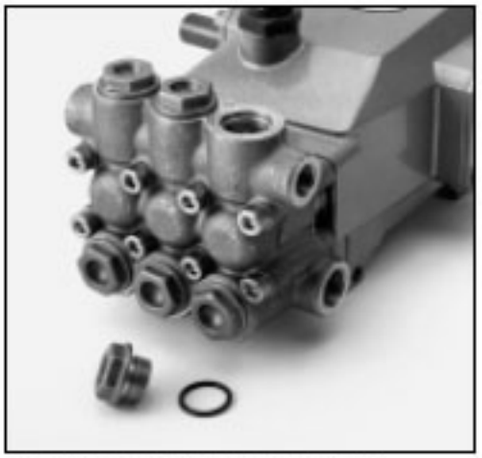

3CP1120, 5CP2120W, 7CP6170
Valve Plug and O-Ring

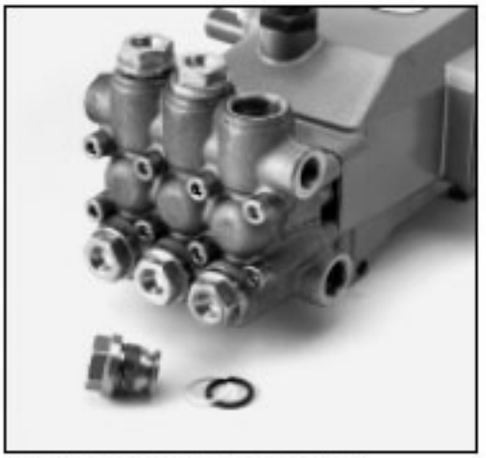

5CP3120, 5CP5120, 5CP5150
Valve Plug, O-Ring and Back-up Ring

SERVICING THE VALVES

1. Remove the hex Valve Plugs (top discharge, bottom inlet).
2. Examine the O-Ring under the plug for cuts or distortion. Replace if worn. Lubricate new O-Rings before installing.

   NOTE: The 5CP3120, 5CP5120 and 5CP5150 have both an O-Ring and Back-up Ring on the Valve Plug.
3. Grasp Spring Retainer by the tab at the top with a pliers and remove from each valve chamber. Usually the valve assembly will remain together while being removed. To separate the valve assembly, insert a screw-driver into the side of the Spring Retainer and press on the back side of the Valve to begin separation, then between the Spring Retainer and Seat to separate completely. If the valve assembly separates during removal, remove the Spring and Valve with a needle nose pliers. With a reverse pliers, remove the Seat from each valve chamber. Then, with a small screwdriver, carefully remove the O-Ring at the bottom of the valve chamber.

   NOTE: The 5CP2120W, 5CP6120 and 7CP6170 have an O-Ring and Back-up Ring on each Seat.
4. Examine all valve parts for pitting, gouges or wear and replace with preassembled Valve Assembly. Service kit contains Spring Retainers, Springs, Valves, Seats, Back-up Rings and O-Rings.

   NOTE: Inlet and discharge valve parts are interchangeable. Two Valve Kits are needed for complete valve change.
5. Grasp new Valve Assembly by the tab at the top with a pliers, immerse in oil and push into each valve chamber. Be certain valve assembly is completely seated in valve chamber.

   NOTE: For certain applications apply liquid gasket to the o-ring crevices and seal surfaces. See Tech Bulletin 053 for model identification.

   NOTE: EPDM elastomers require Silicone-base lubricant.
6. Apply Loctite 242 to the threads of each Valve Plug, thread into valve port and torque per chart.

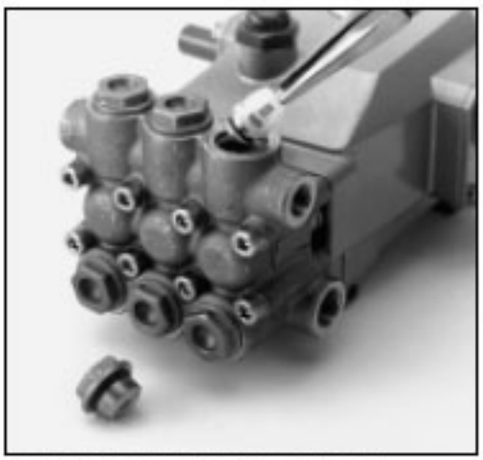

3CP1120, 5CP2120W, 7CP6170
Removal of Valve Assembly

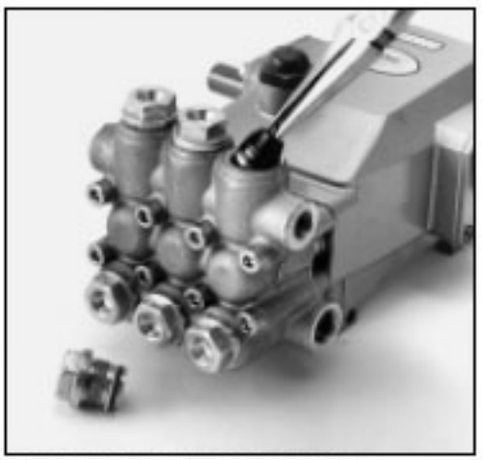

5CP3120, 5CP5120, 5CP5150
Removal of Valve Assembly

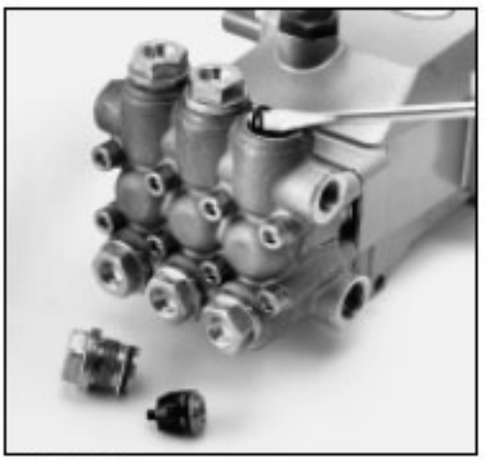

All Models
Removal of Valve Seat O-Ring

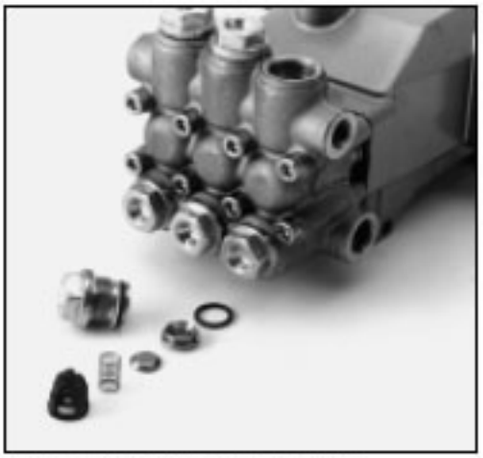

3CP1120, 5CP3120, 5CP5120
Complete Valve Assembly

5CP2120W, 5CP6120, 7CP6170
Complete Valve Assembly

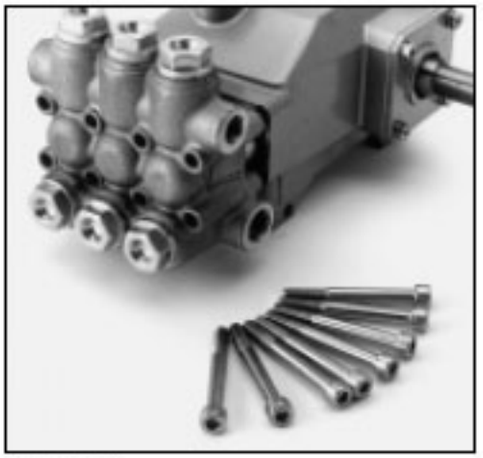

All Models
Removal of Socket Head Screws

SERVICING THE PUMPING SECTION

Disassembly

1. Using an allen wrench, remove the Socket Head Screws from the Manifold Head.
2. Rotate Crankshaft by hand to start separation of Manifold Head from Crankcase.
3. Insert two flat head screwdrivers on opposite sides to further separate Manifold Head from Crankcase. Support the underside of the Manifold Head and tap lightly with a mallet on the backside of the Manifold Head.

   CAUTION: KEEP MANIFOLD PROPERLY ALIGNED WITH CERAMIC PLUNGERS WHEN REMOVING TO AVOID DAMAGE TO THE PLUNGERS.
4. Remove the Seal Retainer from each plunger rod and examine for wear.
5. Examine Ceramic Plunger for cracks or scoring. Refer to **SERVICING THE PLUNGERS** if replacement is needed.

Reassembly

1. Generally Plungers do not need to be replaced. Clean plungers and remove any foreign material with a non-abrasive cleaner.
2. Install Seal Retainer over Plungers with small tab facing down and holes facing forward towards manifold head.
3. Rotate the crankshaft so the two outside plungers are extended the same distance.
4. Lightly lubricate the Plungers and carefully slide the Manifold Head onto the Plungers supporting from the underside. On the high pressure V-Packing models or larger manifolds, it may be necessary to gently tap with a soft mallet until the Manifold Head is flush with the Crankcase.
5. Replace Socket Head Screws and torque per chart.

3CP1120, 5CP2120W, 5CP6120
Seal Arrangement

5CP3120, 5CP5120, 5CP5150, 7CP6170
Seal Arrangement

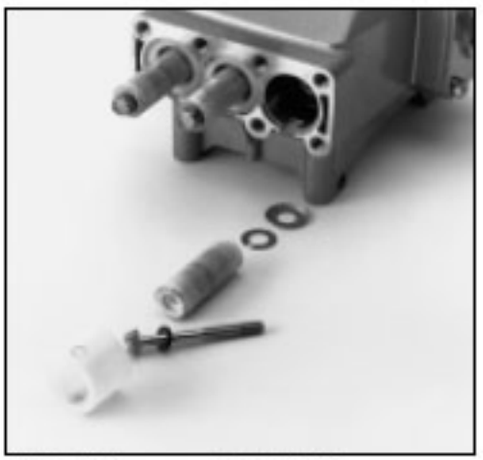

All Models except 7CP6170
Plunger Arrangement

SERVICING THE PLUNGERS

Disassembly

1. To service the plungers, it is necessary to remove the manifold head. Follow disassembly procedure for **SERVICING THE PUMPING SECTION.**
2. Remove the Seal Retainer from each plunger rod.
3. Using a wrench, loosen the Plunger Retainer about three to four turns.
4. Push the Ceramic Plunger back towards the crankcase to separate from the Plunger Retainer and proceed with unthreading the Plunger Retainer by hand.
5. Remove the Plunger Retainer, Seal Washer, Ceramic Plunger, Keyhole Washer and Barrier Slinger from each Plunger Rod.
6. On the model 7CP6170 remove the Plunger Retainer, Stud, Gasket, O-Ring, Back-up Ring, Ceramic Plunger and Barrier Slinger from each Plunger Rod.

Reassembly

1. Visually inspect Crankcase Oil Seals for deterioration or leaks and contact factory for assistance with replacement.
2. Replace Barrier Slinger if damaged and slide onto Plunger Rod **with concave side away from Crankcase.**
3. Examine Sealing Washer for cuts or wear and replace as needed.
4. On the model 7CP6170 examine Gaskets, O-Rings and Back-up Rings for cuts or wear and replace as needed.
5. Examine Plunger Retainers and Studs for wear or damaged threads and replace as needed.
6. On the model 7CP6170 install Gaskets first, then O-Rings and Back-up Rings onto the Plunger Retainer.

   NOTE: Lubricate O-Rings and Back-up Rings for ease in installation and to reduce possible damage.
7. All other models, lubricate and install Sealing Washer onto Plunger Retainer.
8. On the model 7CP6170 apply Loctite 242 to one end of threaded Plunger Retainer Stud and secure to Plunger Retainer.
9. Examine Ceramic Plungers for scoring, scale build-up, chips or cracks and replace as needed. Generally the ceramic plungers do not need to be replaced.
10. Slide Plunger Retainer Assembly into flat end of Ceramic Plunger.
11. Apply Loctite 242 to exposed threaded end of Plunger Retainer.
12. Install Ceramic Plunger with Plunger Retainer onto each Plunger Rod shoulder and thread Plunger Rod. Torque to specifications per chart.

    NOTE: Ceramic Plungers can only be installed in one direction. Counterbore end of Ceramic Plunger to fit over Plunger Rod shoulder.
13. Install Seal Retainers with small tabs facing down and holes facing forward towards manifold head.
14. Proceed with servicing the seals or remounting of Manifold Head as described.

SERVICING THE SEALS AND V-PACKINGS

Disassembly

1. Remove the Manifold Head as described in **SERVICING THE PUMPING SECTION**.
2. Place the **Crankcase side of manifold facing up** and with a reverse pliers, remove the Lo-Pressure Seal from the Seal Case.
3. Using a reverse pliers, remove the press-in style Seal Case from the Manifold Head.
4. Remove the O-Ring from O.D. of Seal Case.
5. **Hi-Pressure Seal Models:** The Hi-Pressure Seal is generally easily removed from the manifold without any tools. If extremely worn, a reverse pliers may be used.
6. **V-Packing Models:** The V-Packings and Male Adapter are easily removed from the manifold without any tools.If extremely worn, a reverse pliers may be used.

Reassembly

NOTE: Prior to reassembly ensure Seals, V-Packing and O-Rings are of the proper configuration to repair original pump (i.e., .0110 for FPM [Viton®], .0220 for EPDM, .3 for HT).

V-Packing Models:

1. Lubricate each seal chamber in manifold head.

   NOTE: For certain applications apply liquid gasket to the O-Ring crevices and seal surfaces. See Tech Bulletin 053 for model identification.

   NOTE: EPDM elastomers require silicone-base lubricant.
2. Insert Male Adapter **with notches down** and **"v" side up** and press completely into each seal chamber by hand.
3. Lubricate V-Packings and install one at a time with **grooved side down** into each seal chamber.
4. Examine Seal Case O-Ring and replace if worn. Lubricate new O-Rings before installing.
5. Press Seal Case into each seal chamber until completely seated.

Hi-Pressure Seal Models:

1. Lubricate each seal chamber in manifold head.

   NOTE: For certain applications apply liquid gasket to the O-Ring crevices and seal surfaces. See Tech Bulletin 053 for model identification.

   NOTE: EPDM elastomers require silicone-base lubricant.
2. Carefully square Hi-Pressure Seal into position by hand with the **grooved side down** (metal back facing out) and press into each seal chamber until completely seated.
3. Examine Seal Case O-Rings and replace if worn. Lubricate new O-Ring before installing.
4. Press the Seal Case into each seal chamber until completely seated.

Lo-Pressure Seal-All Models:

1. Examine Lo-Pressure Seals for wear to the internal ridges, outer surfaces or for broken springs and replace as needed.
2. Install Lo-Pressure Seal into Seal Case with **garter spring down**.
3. All Models: Install Seal Retainer over Plungers with small tabs facing down and holes facing forward towards manifold head.
4. Replace Manifold Head onto pump as described under **SERVICING THE PUMPING SECTION** and torque per chart.

SERVICING THE CRANKCASE SECTION

1. While Manifold Head, Plungers and Seal Retainers are removed, examine Crankcase Oil Seals for leaking and wear.
2. Check for any signs of leaking at Rear Cover, Drain Plug, Bubble Gauge and Dipstick (7CP6170).
3. Check oil level and for evidence of water in oil.
4. Rotate Crankshaft by hand to feel for smooth bearing movement.
5. Examine Crankshaft Oil Seal externally for drying, cracking or leaking.
6. Consult factory or your local distributor if crankcase service is evidenced.

PREVENTATIVE MAINTENANCE CHECK-LIST

Check	Daily	Weekly	50 hrs.	500 hrs.*	1500 hrs.**	3000 hrs.**
Clean Filters	x					
Oil Level/Quality	x					
Oil Leaks	x					
Water Leaks	x					
Belts, Pulley		x				
Plumbing		x				
Initial Oil Change			x			
Oil Change				x		
Seal Change					x	
Valve Change						x
Accessories					x	

* If other than CAT PUMPS special multi-viscosity ISO68 oil is used, change cycle should be every 300 hours.

** Each system's maintenance cycle will be exclusive. If system performance decreases, check immediately. If no wear at 1500 hours, check again at 2000 hours and each 500 hours until wear is observed. Valves typically require changing every other seal change.

Duty cycle, temperature, quality of pumped liquid and inlet feed conditions all effect the life of pump wear parts and service cycle.

** Remember to service the regulator/unloader at each seal servicing and check all system accessories and connections before resuming operation.

Refer to video for additional assistance.

TORQUE CHART

Pump Item Pump Model	Thread	Tool Size [P/N]	Torque in.lbs.	ft.lbs.	Nm
Plunger Retainer	M6	M10 Hex [25062]	55	4.4	6
Manifold Screw	M8	M6 Allen [30941]	115	9.4	13
Valve Plugs					
3CP, 5CP	M22	M24 Hex [44046]	870	72.3	98
7CP	M26	M27 Hex [44045]	870	72.3	98
Bearing Cover Screws					
3CP	M6	M10 Hex./Phil. [25062]	50	4.0	6
5CP, 7CP	M8	M13 Hex [25324]	115	9.4	13
Crankcase Cover	M6	M10 Hex./Phil. [25062]	50	4.0	6
Bubble Oil Gauge	M28	Oil Gauge Tool [44060]	45	3.6	5
Direct Mount Bolts	M8	M13 Hex [25324]	115	9.4	13
	M10	M17 Hex [25063]	240	19.7	29

TECHNICAL BULLETIN REFERENCE CHART

No.	Subject	Models
002	Inlet Pressure VS Liquid Temperature	All Models
003	Power Unit Drive Packages	3PFR - 68PFR, 10FR - 60FR
024	Lubrication of Lo-Pressure Seals	All Models
036	Cylinder and Plunger Reference Chart	All Models
043	LPS and HPS Servicing	All Plunger Models
060	Baffle Assembly	34170
064	By-Pass Hose Sizing	All Unloaders/Regulators
074	Torque Chart	Piston and Plunger Pumps
077	Oil Drain Kit	All Models (except 2SF/4SF)
078	Field Retrofit Mounting	5CP
083	Winterizing a Pump	All Models

INLET CONDITION CHECK-LIST

Review Before Start-Up

Inadequate inlet conditions can cause serious malfunctions in the best designed pump. Surprisingly, the simplest of things can cause the most severe problems or go unnoticed to the unfamiliar or untrained eye. REVIEW THIS CHECK-LIST BEFORE OPERATION OF ANY SYSTEM. Remember, no two systems are alike, so there can be no **ONE** best way to set-up a system. All factors must be carefully considered.

INLET SUPPLY should exceed the maximum flow being delivered by the pump to assure proper performance.

- ❑ Open inlet shut-off valve and turn on water supply to avoid starving pump. **DO NOT RUN PUMP DRY.**
- ❑ Temperatures above 130°F are permissible. Add 1/2 PSI inlet pressure per each degree F over 130°F. Elastomer or RPM changes may be required. See Tech Bulletin 002 or call CAT PUMPS for recommendations.
- ❑ Avoid closed loop systems especially with high temperature, ultra-high pressure or large volumes. Conditions vary with regulating/unloader valve.
- ❑ Low vapor pressure liquids, such as solvents, require a booster pump and C.A.T. to maintain adequate inlet supply.
- ❑ Higher viscosity liquids require a positive head and a C.A.T. to assure adequate inlet supply.
- ❑ Higher temperature liquids tend to vaporize and require positive heads and C.A.T. to assure adequate inlet supply.
- ❑ When using an inlet supply reservoir, size it to provide adequate liquid to accommodate the maximum output of the pump, generally a minimum of 6-10 times the GPM (however, a combination of system factors can change this requirement); provide adequate baffling in the tank to eliminate air bubbles and turbulence; install diffusers on all return lines to the tank.

INLET LINE SIZE should be adequate to avoid starving the pump.

- ❑ Line size must be a minimum of one size larger than the pump inlet fitting. Avoid tees, 90 degree elbows or valves in the inlet line of the pump to reduce the risk of flow restriction and cavitation.
- ❑ The line MUST be a FLEXIBLE hose, NOT a rigid pipe, and reinforced on SUCTION systems to avoid collapsing.
- ❑ The simpler the inlet plumbing the less the potential for problems. Keep the length to a minimum, the number of elbows and joints to a minimum (ideally no elbows) and the inlet accessories to a minimum.
- ❑ Use pipe sealant to assure air-tight, positive sealing pipe joints.

INLET PRESSURE should fall within the specifications of the pump.

- ❑ Acceleration loss of liquids may be increased by high RPM, high temperatures, low vapor pressures or high viscosity and may require pressurized inlet and C.A.T. to maintain adequate inlet supply. DO NOT USE C.A.T. WITH SUCTION INLET.
- ❑ Optimum pump performance is obtained with +20 PSI (1.4 BAR) inlet pressure and a C.A.T. for certain applications. With adequate inlet plumbing, most pumps will perform with flooded suction. Maximum inlet pressure is 60 PSI (4 BAR).
- ❑ After prolonged storage, pump should be rotated by hand and purged of air to facilitate priming. Disconnect the discharge port and allow liquid to pass through pump and measure flow.

INLET ACCESSORIES are offered to protect against over pressurization, contamination or temperature and control flow.

- ❑ A shut-off valve is recommended to facilitate maintenance.
- ❑ Installation of a C.A.T. is essential in applications with stressful conditions such as high temperatures, booster pump feed or long inlet lines. **Do not use C.A.T. with negative inlet pressure.**
- ❑ A stand pipe can be used in some applications to help maintain a positive head at the pump inlet line.
- ❑ Inspect and clean inlet filters on a regular schedule to avoid flow restriction.
- ❑ A pressure transducer is necessary to accurately read inlet pressure. **Short term, intermittent cavitation will not register on a standard gauge.**
- ❑ All accessories should be sized to avoid restricting the inlet flow.
- ❑ All accessories should be compatible with the solution being pumped to prevent premature failure or malfunction.
- ❑ Optional inlet protection can be achieved by installing a pressure cut off switch between the inlet filter and the pump to shut off pump when there is no positive inlet pressure.

BY-PASS TO INLET Care should be exercised when deciding the method of by-pass from control valves.

- ❑ It is recommended the by-pass be directed to a baffled reservoir tank, with at least one baffle between the by-pass line and the inlet line to the pump.
- ❑ Although not recommended, by-pass liquid may be returned to the inlet line of the pump if the system is properly designed to protect your pump. When a pulsation dampener is used, a PRESSURE REDUCING VALVE must be installed on the inlet line (BETWEEN THE BY-PASS CONNECTION AND THE INLET TO THE PUMP) to avoid excessive pressure to the inlet of the pump. It is also recommended that a THERMO VALVE be used in the by-pass line to monitor the temperature build-up in the by-pass loop to avoid premature seal failure.
- ❑ A low-pressure, flexible cloth braid (not metal braid) hose should be used from the by-pass connection to the inlet of the pump.
- ❑ Caution should be exercised not to undersize the by-pass hose diameter and length. Refer to Technical Bulletin 064 for additional information on the size and length of the by-pass line.
- ❑ Check the pressure in the by-pass line to avoid over pressurizing the inlet.
- ❑ The by-pass line should be connected to the pump inlet line at a gentle angle of 45° or less and no closer than 10 times the pump inlet port diameter e.g. 1-1/2" port size = 15" distance from pump inlet port.

HOSE FRICTION LOSS

Water* Flow Gal/Min	PRESSURE DROP IN PSI PER 100 FT OF HOSE WITH TYPICAL WATER FLOW RATES Hose Inside Diameters, Inches						
	1/4	5/16	3/8	1/2	5/8	3/4	1"
0.5	16	5	2				
1	54	20	7	2			
2	180	60	25	6	2		
3	380	120	50	13	4	2	
4		220	90	24	7	3	
5		320	130	34	10	4	
6			220	52	16	7	1
8			300	80	25	10	2
10			450	120	38	14	3
15			900	250	80	30	7
20			1600	400	121	50	12
25				650	200	76	19
30					250	96	24
40					410	162	42
50					600	235	62
60						370	93

*At a fixed flow rate with a given size hose, the pressure drop across a given hose length will be directly proportional. A 50 ft. hose will exhibit one-half the pressure drop of a 100 ft. hose. Above values shown are valid at all pressure levels.

WATER LINE PRESSURE LOSS

PRESSURE DROP IN PSI PER 100 FEET

Water GPM	Steel Pipe—Nominal Dia. 1/4	3/8	1/2	3/4	1	1¼	1½	Brass Pipe—Nominal Dia. 1/4	3/8	1/2	3/4	1	1¼	1½	Copper Tubing O.D. Type L 1/4	3/8	1/2	5/8	3/4	7/8
1	5.5	1.9						6.0	1.6						120	15	2.9	1.0		
2	30	7.0	2.1					20	5.6	1.6					400	45	10	3.4	1.3	
3	60	14	4.5	1.1				40	11	3.6						94	20	6.7	2.6	
5	150	36	12	2.8				100	28	9.0	2.2					230	50	17	6.1	3.0
8	330	66	28	6.7	1.9			220	62	21	5.2	1.6				500	120	40	15	6.5
10	520	130	43	10	3.0			320	90	30	7.8	2.4					150	55	22	10
15		270	90	21	6.2	1.6			190	62	16	5.0	1.5					120	44	20
25		670	240	56	16	4.2	2.0		470	150	40	12	3.8	1.7				350	110	50
40					66	17	8.0					39	11	5.0				550	200	88
60						37	17						23	11						
80						52	29						40	19						
100						210	107	45					61	28						

RESISTANCE OF VALVES AND FITTINGS

Nominal Pipe Size Inches	Inside Diameter Inches	Equivalent Length of Standard Pipe in Feet: Gate Valve	Globe Valve	Angle Valve	45° Elbow	90° Elbow	180° Close Ret	Tee Thru Run	Tee Thru Branch
1/2	0.622	0.41	18.5	9.3	0.78	1.67	3.71	0.93	3.33
3/4	0.824	0.54	24.5	12.3	1.03	2.21	4.90	1.23	4.41
1	1.049	0.69	31.2	15.6	1.31	2.81	6.25	1.56	5.62
1¼	1.380	0.90	41.0	20.5	1.73	3.70	8.22	2.06	7.40
1½	1.610	1.05	48.0	24.0	2.15	4.31	9.59	2.40	8.63
2	2.067	1.35	61.5	30.8	2.59	5.55	12.30	3.08	11.60
2½	2.469	1.62	73.5	36.8	3.09	6.61	14.70	3.68	13.20
3	3.068	2.01	91.5	45.8	3.84	8.23	18.20	4.57	16.40
4	4.026	2.64	120.0	60.0	5.03	10.80	23.90	6.00	21.60

Arriving at a total line pressure loss, consideration should then be given to pressure loss created by valves, fittings and elevation of lines.

If a sufficient number of valves and fittings are incorporated in the system to materially affect the total line loss, add to the total line length, the equivalent length of line of each valve or fitting.

TYPICAL RESERVOIR TANK

RECOMMENDED 6 TO 10 TIMES SYSTEM CAPACITY

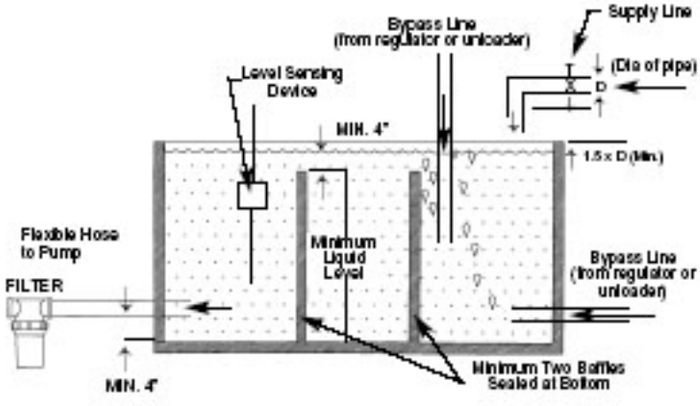

Handy Formulas to Help You

Q. How can I find the RPM needed to get specific GPM (Gallons Per Minute) I want?

A. Desired RPM = Desired GPM x $\frac{\text{Rated RPM}}{\text{Rated GPM}}$

Q. I have to run my pump at a certain RPM. How do I figure the GPM I'll get?

A. Desired GPM = Desired RPM x $\frac{\text{Rated GPM}}{\text{Rated RPM}}$

Q. Is there a simple way to find the approximate horsepower I'll need to run the pump?

A. Electric Brake Horsepower Required = $\frac{\text{GPM x PSI}}{1460}$ (Standard 85% Mech. Efficiency)

Q. What size motor pulley should I use?

A. Pump Pulley (Outer Diameter) x $\frac{\text{Pump RPM}}{\text{Motor/Engine RPM}}$ (Consult Engine Mfr.)

Q. How do I calculate the torque for my hydraulic drive system?

A. Torque (ft. lbs.) = 3.6 $\left(\frac{\text{GPM x PSI}}{\text{RPM}}\right)$

Avoid Cavitation Damage

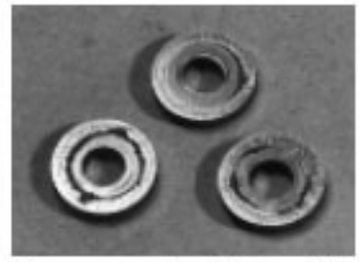

One or several of the conditions shown in the chart below may contribute to cavitation in a system resulting in premature wear, system downtime and unnecessary operating costs.

CONDITION	SOLUTION
Inadequate inlet line size	• Increase line size to the inlet port or one size larger
Water hammering liquid acceleration/ deacceleration	• Install C.A.T. Tube • Move pump closer to liquid supply
Rigid Inlet Plumbing	• Use flexible wire reinforced hose to absorb pulsation and pressure spikes
Excessive Elbows in Inlet Plumbing	• Keep elbows to a minimum and less than 90°
Excessive Liquid Temperature	• Use Thermo Valve in bypass line • Do not exceed pump temperature specifications • Substitute closed loop with baffled holding tank • Adequately size tank for frequent or high volume bypass • Pressure feed high temperature liquids • Properly ventilate cabinets and rooms
Air Leaks in Plumbing	• Check all connections • Use Teflon tape
Agitation in Supply Tank	• Size tank according to pump output — Minimum 6-10 times system GPM • Baffle tank to purge air from liquid and separate inlet from discharge
High Viscosity Liquids	• Verify viscosity against pump specifications before operation • Elevate liquid temperature enough to reduce viscosity • Lower RPM of pump • Pressure feed pump • Increase inlet line size
Clogged Filters	• Perform regular maintenance or use clean filters to monitor build up • Use adequate mesh size for liquid and pump specifications

DIAGNOSIS AND MAINTENANCE

One of the most important steps in a high pressure system is to establish a regular maintenance program. This will vary slightly with each system and is determined by various elements such as the duty cycle, the liquid being pumped, the actual specifications vs rated specifications of the pump, the ambient conditions, the inlet conditions and the accessories in the system. A careful review of the necessary inlet conditions and protection devices required before the system is installed will eliminate many potential problems.

CAT PUMPS are very easy pumps to service and require far less frequent service than most pumps. Typically, only common tools are required, making in-field service convenient, however, there are a few custom tools, special to certain models, that do simplify the process. This service manual is designed to assist you with the disassembly and reassembly of your pump. The following guide will assist in determining the cause and remedy to various operating conditions. You can also review our **FAQ** or **SERVICE** sections on our **WEB SITE** for more facts or contact CAT PUMPS directly.

PROBLEM	PROBABLE CAUSE	SOLUTION
Low pressure	•Worn nozzle.	•Replace with properly sized nozzle.
	•Belt slippage.	•Tighten belt(s) or install new belt(s).
	•Air leak in inlet plumbing.	•Tighten fittings and hoses. Use PTFE liquid or tape.
	•Pressure gauge inoperative or not registering accurately.	•Check with new gauge. Replace worn or damaged gauge.
	•Relief valve stuck, partially plugged or improperly adjusted.	•Clean/adjust relief valve. Replace worn seats/valves and o-rings.
	•Inlet suction strainer (filter) clogged or improperly sized.	•Clean filter. Use adequate size filter. Check more frequently.
	•Abrasives in pumped liquid.	•Install proper filter.
	•Leaky discharge hose.	•Replace discharge hose with proper rating for system.
	•Inadequate liquid supply.	•Pressurize inlet and install C.A.T.
	•Severe cavitation.	•Check inlet conditions.
	•Worn seals.	•Install new seal kit. Increase frequency of service.
	•Worn or dirty inlet/discharge valves.	•Clean inlet/discharge valves or install new valve kit.
Pulsation	•Faulty Pulsation Dampener.	•Check precharge. If low, recharge, or install a new dampener.
	•Foreign material trapped in inlet/discharge valves.	•Clean inlet/discharge valves or install new valve kit.
Water leak		
•Under the manifold	•Worn V-Packings, Hi-Pressure or Lo-Pressure Seals.	•Install new seal kit. Increase frequency of service.
	•Worn adapter o-rings.	•Install new o-rings.
•Into the crankcase	•Humid air condensing into water inside the crankcase.	•Install oil cap protector. Change oil every 3 months or 500 hours.
	•Excessive wear to seals and V-Packings.	•Install new seal kit. Increase frequency of service.
Knocking noise		
•Inlet supply	•Inadequate inlet liquid supply.	•Check liquid supply. Increase line size, pressurize or install C.A.T.
•Bearing	•Broken or worn bearing.	•Replace bearing.
•Pulley	•Loose pulley on crankshaft	•Check key and tighten set screw.
Oil leak		
•Crankcase oil seals.	•Worn crankcase oil seals.	•Replace crankcase oil seals.
•Crankshaft oil seals and o-rings.	•Worn crankshaft oil seals or o-rings on bearing cover.	•Remove bearing cover and replace o-rings and/or oil seals.
•Drain plug	•Loose drain plug or worn drain plug o-ring.	•Tighten drain plug or replace o-ring.
•Bubble gauge	•Loose bubble gauge or worn bubble gauge gasket.	•Tighten bubble gauge or replace gasket.
•Rear cover	•Loose rear cover or worn rear cover o-ring.	•Tighten rear cover or replace o-ring.
•Filler cap	•Loose filler cap or excessive oil in crankcase.	•Tighten filler cap. Fill crankcase to specified capacity.
Pump runs extremely rough		
•Inlet conditions	•Restricted inlet or air entering the inlet plumbing	•Correct inlet size plumbing. Check for air tight seal.
•Pump valves	•Stuck inlet/discharge valves.	•Clean out foreign material or install new valve kit.
•Pump seals	•Leaking V-Packings, Hi-Pressure or Lo-Pressure seals.	•Install new seal kit. Increase frequency of service.
Premature seal failure	•Scored plungers.	•Replace plungers.
	•Over pressure to inlet manifold.	•Reduce inlet pressure per specifications.
	•Abrasive material in the liquid being pumped.	•Install proper filtration at pump inlet and clean regularly.
	•Excessive pressure and/or temperature of pumped liquid.	•Check pressure and inlet liquid temperature.
	•Running pump dry.	•DO NOT RUN PUMP WITHOUT LIQUID.
	•Starving pump of adequate liquid.	•Increase hose one size larger than inlet port size. Pressurize and install C.A.T.
	•Eroded manifold.	•Replace manifold. Check liquid compatibility.

5CP Plunger Pump

Models 5CP2120W 5CP2140WCS 5CP2150W

FEATURES

Superior Design

- Triplex plunger design gives smoother liquid flow.
- Hi-Pressure Seals are completely lubricated and cooled by the liquids being pumped.
- Inlet and discharge valve assemblies interchange for easier maintenance.
- Lubricated Lo-Pressure Seals provides double protection against external leakage.
- Oil bath crankcase assures optimum lubrication.
- Close tolerance concentricity of the ceramic plunger maximizes seal life.

Quality Materials

- All stainless steel valves are heat treated and seats are roller burnished for a positive seal and extended valve life.
- Forged brass manifolds for strength and corrosion resistance.
- Special blend W770 manifold offers washout and freeze protection for car wash applications.
- Special concentric, high density, polished, graphite impregnated, solid ceramic plungers are abrasion resistant and result in extended seal life.
- Specially formulated, CAT PUMP exclusive, Hi-Pressure Seals offer unmatched performance and seal life.
- Die cast aluminum crankcase provides high strength, minimum weight and precision tolerance control.
- Chrome-moly crankshaft gives unmatched strength and surface hardness.
- Oversized crankshaft bearings with greater loading capacity mean longer bearing life.

Easy Maintenance

- Convenient "press-in" style seal case for ease in servicing.
- Wet-end is easily serviced without entering crankcase, requiring less time and effort.
- Valve assemblies are accessible without disturbing piping, for quick service.
- Preset packings mean no packing gland adjustment is necessary, reducing maintenance costs.

⚠ WARNING

All systems require both a primary pressure regulating device (i.e., regulator, unloader) and a secondary pressure safety relief device (i.e., pop-off valve, safety valve). Failure to install such relief devices could result in personal injury or damage to the pump or to system components. CAT PUMPS does not assume any liability or responsibility for the operation of a customer's high pressure system.

SPECIFICATIONS

	U.S. Measure	Metric Measure
MODEL 5CP2120W		
Flow	4.0 GPM	(15 L/M)
Pressure Range	100-2500 PSI	(7-175 BAR)
RPM	950 RPM	(950 RPM)
Bore	0.787"	(20 mm)
Stroke	0.709"	(18 mm)
Weight	19.14 lbs.	(8.7 kg)
MODEL 5CP2140WCS		
Flow	4.0 GPM	(15 L/M)
Pressure Range	100-2500 PSI	(7-175 BAR)
RPM	1725 RPM	(1725 RPM)
Bore	0.787"	(20 mm)
Stroke	0.394"	(10 mm)
Weight	19.14 lbs.	(8.7 kg)
MODEL 5CP2150W		
Flow	5.0 GPM	(19 L/M)
Pressure Range	100-2000 PSI	(7-140 BAR)
RPM	1725 RPM	(1725 RPM)
Bore	0.787"	(20 mm)
Stroke	0.472"	(12 mm)
Weight	19.14 lbs.	(8.7 kg)
COMMON SPECIFICATIONS		
Inlet Pressure Range (950 RPM)	– 5 to 60 PSI	(–0.35 to 4 BAR)
Inlet Pressure Range (1725 RPM)	Flooded to 60 PSI	(Flooded to 4 BAR)
Crankcase Capacity	17 oz.	(0.51 L)
Max. Liquid Temperature	160°F	(71°C)
Above 130°F call CAT PUMPS for inlet conditions and elastomer recommendations.		
Inlet Ports (2)	1/2" NPTF	(1/2" NPTF)
Discharge Ports (2)	3/8" NPTF	(3/8" NPTF)
Shaft Diameter	0.787"	(20 mm)
Dimensions	10.35 x 10.0 x 5.78"	(263 x 254 x 147 mm)

HORSEPOWER REQUIREMENTS

MODEL	FLOW		PRESSURE				MOTOR PULLEY SIZE	
			PSI 1200	PSI 1500	PSI 2000	PSI 2500	Using 1725 RPM Motor & 8" Std. Pump Pulley	
	U.S. GPM	L/M	BAR 85	BAR 105	BAR 140	BAR 175	RPM	Pulley O.D.
2120W	4.0	15	3.3	4.1	5.5	6.9	950	4.3
Alternate	5.0	19	4.1	5.1	6.9	N/A	1188	5.5
2140WCS	4.0	15	3.3	4.1	5.5	6.9	1725	Direct
2150W	5.0	19	4.1	5.1	6.9	N/A	1725	Direct

DETERMINING THE PUMP R.P.M. $\frac{\text{Rated G.P.M.}}{\text{Rated R.P.M.}} = \frac{\text{"Desired" G.P.M.}}{\text{"Desired" R.P.M.}}$

DETERMINING THE REQUIRED H.P. $\frac{\text{GPM x PSI}}{1460} = \text{Electric Brake H. P. Required}$

DETERMINING MOTOR PULLEY SIZE $\frac{\text{Motor Pulley O.D.}}{\text{Pump R.P.M.}} = \frac{\text{Pump Pulley O.D.}}{\text{Motor R.P.M.}}$

See complete Drive Packages [Incids: Pulleys, Belts, Hubs, Key] Tech Bulletin 003.
Refer to pump Service Manual for repair procedure and additional technical information.

"Customer confidence is our greatest asset"

PARTS LIST

ITEM	PART NUMBER 5CP2120W	MATL	5CP2140WCS	MATL	5CP2150W	MATL	DESCRIPTION	QTY
2	30057	STL	30057	STL	30057	STL	Key (M6x6x25)	1
5	96031	STZP	96031	STZP	96031	STZP	Screw, Sems HHC (M8x16)	8
8	46910	AL	46910	AL	46910	AL	Cover, Bearing	2/1
10	14028	NBR	14028	NBR	14028	NBR	O-Ring, Bearing Cover - 70D	2
11	43222	NBR	43222	NBR	43222	NBR	Seal, Oil, Crankshaft	2
15	14480	STL	14480	STL	14480	STL	Bearing, Ball	2
20	48742	TNM	48742	TNM	48742	TNM	Rod, Connecting Assy [10/01]	3
25	46928	FCM	—		46982	FCM	Crankshaft, Dual End	1
	—		48203	FCM	—		Crankshaft, Single End	1
30	—		48224	AL	—		Cover, Bearing Blind	1
32	46798		46798		46798		Cap, Oil Filler, Domed	1
33	14179	NBR	14179	NBR	14179	NBR	O-Ring, Oil Filler Cap - 70D	1
37	92241		92241		92241		Gauge, Oil, Bubble w/Gasket - 80D	1
38	44428	NBR	44428	NBR	44428	NBR	Gasket, Flat, Oil Gauge - 80D	1
40	92519	STZP	92519	STZP	92519	STZP	Screw, Sems HHC (M6x16)	4
48	25625	STCP	25625	STCP	25625	STCP	Plug, Drain (1/4"x19BSP)	1
49	23170	NBR	23170	NBR	23170	NBR	O-Ring, Drain Plug - 70D	1
50	46940	AL	46940	AL	46940	AL	Cover, Rear	1
51	14044	NBR	14044	NBR	14044	NBR	O-Ring, Rear Cover	1
53	48617	AL	48617	AL	48617	AL	Crankcase	1
64	46746	CM	46746	CM	46746	CM	Pin, Crosshead	3
65	48458	BBNP	48458	BBNP	48458	BBNP	Rod, Plunger	3
70	46838	NBR	46838	NBR	46838	NBR	Seal, Oil, Crankcase - 70D	3
75	43328	S	43328	S	43328	S	Slinger, Barrier	3
88	45697	S	45697	S	45697	S	Washer, Keyhole (M18)	3
90	46841	CC	46841	CC	46841	CC	Plunger (M20x50)	3
98	46730	NBR	46730	NBR	46730	NBR	Washer, Seal - 90D	3
	48394	FPM	48394	FPM	48394	FPM	Washer, Seal - 90D	3
	◆ 48432	EPDM	◆ 48432	EPDM	◆ 48432	EPDM	Washer, Seal	3
99	48201	SSL	48201	SSL	48201	SSL	Retainer, Plunger w/Stud (M6)	3
100	46749	PVDF	46749	PVDF	46749	PVDF	Retainer, Seal	3
106	43305	NBR	43305	NBR	43305	NBR	Seal, LPS w/S-Spg	3
	45153	FPM	45153	FPM	45153	FPM	Seal, LPS w/SS-Spg	3
	◆ 48429	EPDM	◆ 48429	EPDM	◆ 48429	EPDM	Seal, LPS w/SS-Spg	3
120	46843	BB	46843	BB	46843	BB	Case, Seal (Press-in-style)	3
121	13978	NBR	13978	NBR	13978	NBR	O-Ring, Seal Case - 70D	3
	14329	FPM	14329	FPM	14329	FPM	O-Ring, Seal Case	3
	◆ 48904	EPDM	◆ 48904	EPDM	◆ 48904	EPDM	O-Ring, Seal Case	3
125	43307	SNG	43307	SNG	43307	SNG	Seal, HPS w/S	3
	44936	FPM	44936	FPM	44936	FPM	Seal, HPS w/SS	3
	46667	HT	46667	HT	46667	HT	Seal, HPS w/S	3
139	22179	BBCP	22179	BBCP	22179	BBCP	Plug, Inlet (1/2"NPT)	1
162	48361	D	48361	D	48361	D	Back-up-Ring, Seat	6
163	43358	NBR	43358	NBR	43358	NBR	O-Ring, Seat - 70D	6
	44938	FPM	44938	FPM	44938	FPM	O-Ring, Seat - 70D	6
	◆ 48908	EPDM	◆ 48908	EPDM	◆ 48908	EPDM	O-Ring, Seat	6
164	43725	S	43725	S	43725	S	Seat	6
166	43723	S	43723	S	43723	S	Valve	6
167	43750	S	43750	S	43750	S	Spring	6
168	44565	PVDF	44565	PVDF	44565	PVDF	Retainer, Spring	6
172	17615	NBR	17615	NBR	17615	NBR	O-Ring, Valve Plug - 75D	6
	15855	FPM	15855	FPM	15855	FPM	O-Ring, Valve Plug - 70D	6
	◆ 48431	EPDM	◆ 48431	EPDM	◆ 48431	EPDM	O-Ring, Valve Plug - 75D	6
174	43849	BBCP	43849	BBCP	43849	BBCP	Plug, Valve	6
185	48245	W770	48245	W770	48245	W770	Manifold, Head - W770	1
188	87872	STZP	87872	STZP	87872	STZP	Screw, HSH (M8x70)	8
196	22187	BBCP	22187	BBCP	22187	BBCP	Plug, Discharge (3/8"NPT)	1
250	118672	STCP	118672	STCP	118672	STCP	Protector, Shaft	1
255	30243	STZP	30243	STZP	30243	STZP	Mount, Direct	1
260	30611	STZP	30611	STZP	30611	STZP	Assembly, Angle Rail - B	1
							(Incids: 28499, 30900, 30910, 30920) (Belt Drive Only)	
	30637	STZP	30637	STZP	30637	STZP	Mount, Angle Assy-Retro Fit	1
265	30659		30659		30659		Kit, Complete Mounting	1
							(Incids: 30611, 30633, 118672) (Belt Drive Only)	
275	30944	STL	30944	STL	30944	STL	Hub & Key Assy (M20 w/M6 Keyway)	1
							[See Drive Packages, Tech Bulletin 003]	
283	34334		34334		34334		Kit, Oil Drain	1
298	34970	STZP	34970	STZP	34970	STZP	Clutch, Assy, Single Groove, 20mm, 12VDC	1
	34980	STZP	34980	STZP	34980	STZP	Clutch, Assy, Dual Groove, 20mm, 12VDC	1
299	816650	W770	816650	W770	816650	W770	Head, Complete	1
300	33628	NBR	33628	NBR	33628	NBR	Kit, Seal (Incids: 98, 106, 121, 125)	1
	31628	FPM	31628	FPM	31628	FPM	Kit, Seal (Incids: 98, 106, 121, 125)	1
	◆ 31648	EPDM*	◆ 31648	EPDM*	◆ 31648	EPDM*	Kit, Seal (Incids: 98, 106, 121, 125)	1
	31638	HT	31638	HT	31638	HT	Kit, Seal (Incids: 98, 106, 121, 125)	1

EXPLODED VIEW

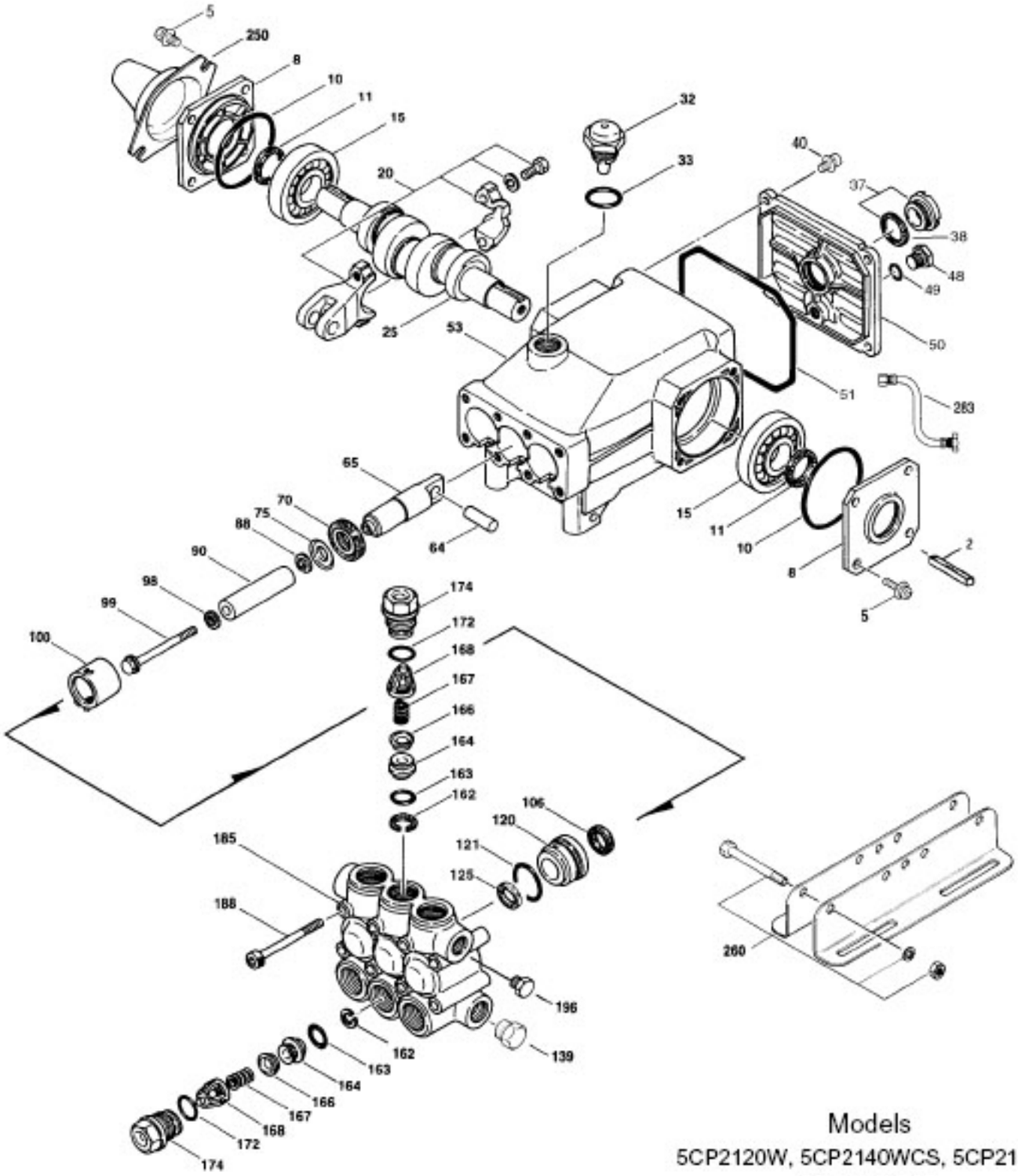

Models

5CP2120W, 5CP2140WCS, 5CP2150W

March 2003

	5CP2120W	MATL	5CP2140WCS	MATL	5CP2150W	MATL		
310	*30821*	*NBR*	*30821*	*NBR*	*30821*	*NBR*	*Kit, Valve (Inclds: 162,163,164,166,167,168,172)*	*2*
	31821	*FPM*	*31821*	*FPM*	*31821*	*FPM*	*Kit, Valve (Inclds: 162,163,164,166,167,168,172)*	*2*
	◆ 31162	*EPDM*	*◆ 31162*	*EPDM*	*◆ 31162*	*EPDM*	*Kit, Valve (Inclds: 162,163,164,166,167,168,172)*	*2*
350	*30696*	*STZP*	*30696*	*STZP*	*30696*	*STZP*	*Plier, Reverse*	*1*
400	*7655*	*BB*	*7655*	*BB*	*7655*	*BB*	*Modular Unloader (See Individual Data Sheet)*	*1*
—	—	—	*8026ES-8042ES*	—	*8026ES-8042ES*	—	*BD Motors (See Individual Data Sheet)*	*1*
—	*6107*	—	*6107*	—	*6107*	—	*Oil, Bottle (21 oz) ISO 68 Multi-viscosity Hydraulic (Fill to specified crankcase capacity prior to start-up)*	*1*

Bold print part numbers are unique to a particular pump model. *Italics are optional items.*
◆Silicone oil/grease required. [ ] Date of latest production change. W770 effective with 97 production.
*Review material codes for individual items (HT generally may be used as alternate).
See Tech Bulletins 002, 003, 024, 036, 043, 053, 060, 061, 064, 073, 074, 077, 078 and 083 for additional information.
MATERIAL CODES (Not Part of Part Number): AL=Aluminum BB=Brass BBNP=Brass/Nickel Plated CC=Ceramic CM=Chrome-moly D=Delrin*
FBB=Forged Brass FCM=Forged Chrome-moly FPM=Fluorocarbon (Viton*) HS=High Strength HT=Hi-Temp (EPDM Alternative)
NBR=Medium Nitrile (Buna-N) PVDF=Fluoroplastic (High Strength) S=304SS SNG=Special Blend (Buna) SSL=316SS/Low Carbon STL=Steel
W770=Special Alloy STCP=Steel/Chrome Plated STZP=Steel/Zinc Plated TNM=Special High Strength

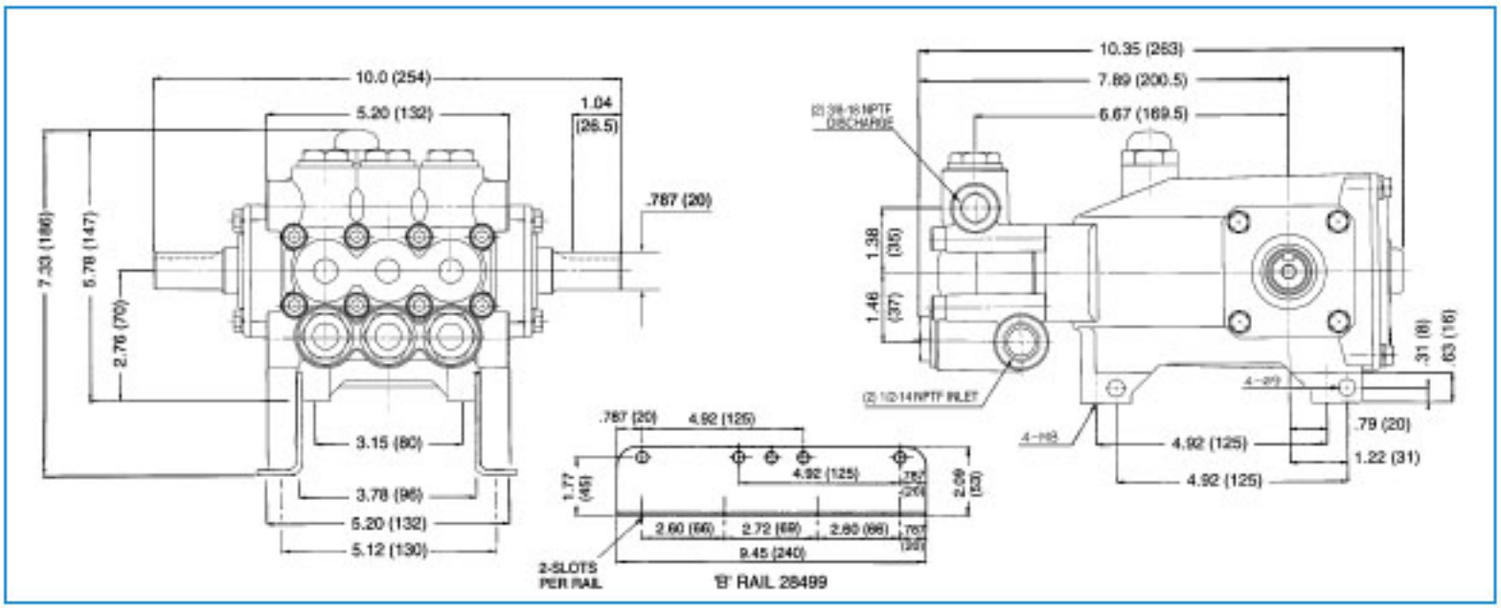

Models 5CP2120W, 5CP2140WCS, 5CP2150W

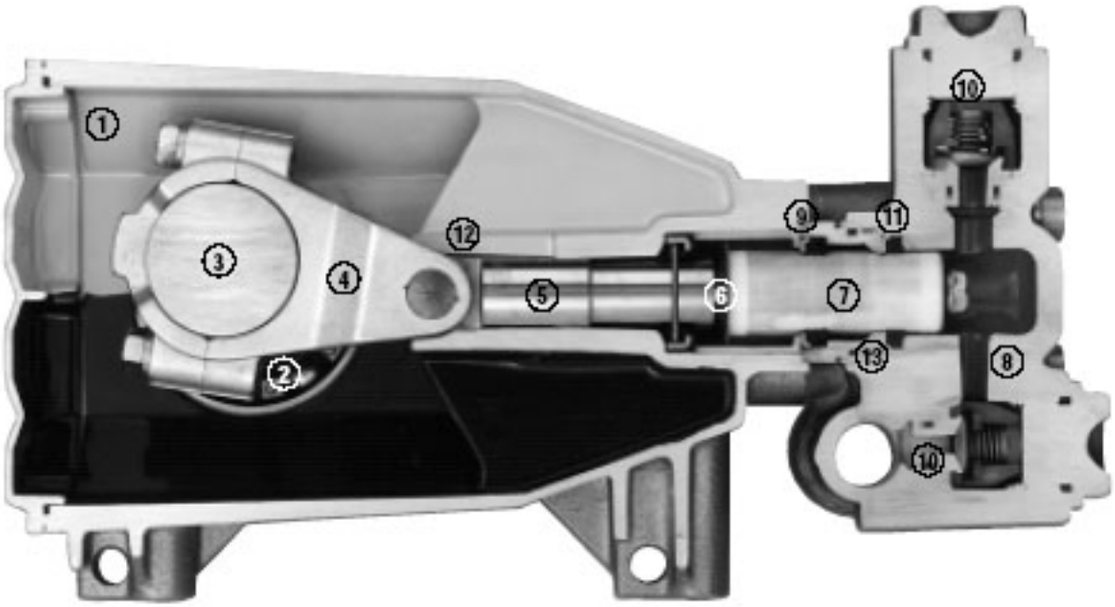

1 Die cast aluminum crankcase means high strength, lightweight, and excellent tolerance control.

2 Oversized crankshaft bearings provide extended bearing life and pump performance.

3 Chrome-moly crankshaft provides unmatched strength and surface hardness for long life.

4 Matched high strength connecting rods noted for strength and superior bearing quality.

5 The plunger rods with hardened surfaces offer wear resistance and Zamak crossheads for high load capacity.

6 The stainless steel slinger provides back-up protection for the crankcase seal, keeping pumped liquids out of the crankcase.

7 Special concentric, high density, polished, graphite impregnated, solid ceramic plungers are abrasion resistant and result in extended seal life.

8 Manifolds are a high tensile strength forged brass for long term, continuous duty.

9 100% wet seal design adds to service life by allowing pumped liquids to cool and lubricate on both sides.

10 Stainless steel valves, seats and springs provide corrosion-resistance, positive seating and long life.

11 Specially formulated, CAT PUMP exclusive, Hi-Pressure Seals offer unmatched performance and seal life.

12 Crossheads are 360° supported for uncompromising alignment.

13 Press-in style seal case offers alignment and support for seals and "no tools" servicing.

Products described hereon are covered by one or more of the following U.S. patents 3558244, 3652188, 3800608, 3920356, 3930756 and 5035580

World Headquarters
CAT PUMPS
1681 - 94th Lane N.E. Minneapolis, MN 55449-4324
Phone (763) 780-5440 — FAX (763) 780-2958
e-mail: techsupport@catpumps.com
www.catpumps.com

International Inquiries
FAX (763) 785-4329
e-mail: intlsales@catpumps.com

CAT PUMPS
The Pumps with Nine Lives

CAT PUMPS (U.K.) LTD.
1 Fleet Business Park, Sandy Lane, Church Crookham, Fleet
Hampshire GU52 8BF, England
Phone Fleet 44 1252-622031 — Fax 44 1252-626655
e-mail: sales@catpumps.co.uk

N.V. CAT PUMPS INTERNATIONAL S.A.
Helvetiekens 6A, 2550 Kontich, Belgium
Phone 32-3-450.71.50 — Fax 32-3-450.71.51
e-mail: cpi@catpumps.be www.catpumps.be

CAT PUMPS DEUTSCHLAND GmbH
Buchwiese 2, D-65510 Idstein, Germany
Phone 49 6126-9303 0 — Fax 49 6126-9303 33
e-mail: catpumps@t-online.de www.catpumps.de

PN 903100 Rev B 3335

Crankcase Oil

Models

Case **6100**

Twin-Pack **6105**

Bottle **6107**

Drum **6109**

TYPICAL INSPECTION TESTS

Grade ASTM	315
Grade AGMA	2
API Specific Gravity, @60°F	29.4
Specific Gravity @60°F	0.88
Color ASTM	< 7.0
Flash Point COC °F	400°
Fire Point COC °F	424°
Pour Point °F Typical	-40°
Kinematic Viscosity	
104°F, cst	68.0
212°F, cst	10.2
Viscosity Index	135
Aniline Point °F	190°
Foam Test ASTM	Pass
Total Acid Number, mg*KOH/g	0.9
Total Base Number, mg*KOH/g	0.6
Carbon Residue, Rams, Wt. %	.026
Zinc Content, ppm	500
Phosphorus Content, ppm	360
Rust Test, ASTM D 665, A&B	Pass
Copper Corrosion, 3 Hrs.@212°F	1a

FEATURES

- Special blend, multi-viscosity petroleum based hydraulic lubricant for high pressure hydraulic systems.
- Non-detergent for greater wear and protection at high RPM and high pressure.
- Anti-wear, high pressure, and oxidizer inhibitor additives for maximum protection and wear.
- Runs significantly cooler than typical lubricants, enhancing the longevity of components.

SPECIFICATIONS

	6100	6105	6107	6109
Grade				
Special Hydraulic	ISO 68	ISO 68	ISO 68	ISO 68
Capacity	Case (12-21 oz.)	5 Gal. (2-2.5 Gal.)	Bottle (21 oz.)	Drum (30 Gal.)
Weight	17 lbs.	41 lbs.	21 oz.	243 lbs.
Dimensions	10x10x6.75"	15x15x9.5"	6x3x2"	18x29"

GENERAL USE

Good lubrication is the easiest, most efficient and least expensive preventative maintenance for your pump. Change initial fill after 50 hours running period. Change oil every 3 months or at 500 hour intervals thereafter.

Refer to individual data sheet or service manuals for prescribed amount of oil for each pump crankcase and fill crankcase to designated level (usually to marking on oil gauge).

Pumps using wicks should be periodically lubricated through the access holes on the top front of the crankcase. See Tech Bulletin 024 on lubrication of the Lo-Pressure seals. Larger pumps often use oilers.

Oilers should be filled at start-up and opened for a minimum of thirty minutes prior to start-up. Adjust drip rate after start-up according to operating cycle of pump. (Approximately 2-3 drops per hole per week for typical installation.) See Tech Bulletin 024.

U.S. DEPARTMENT OF LABOR
Occupational Safety and Health Administration

Essentially Complies with OSHA Standard 29 CFR 1910.1200
Form OMB 1218-0072

MATERIAL SAFETY DATA SHEET

7-1-03

Product Trade Name: *CAT PUMPS Premium Grade Hydraulic*
Chemical Name & Synonyms: *Non-Detergent Multi-Viscosity ISO-68 Grade with Anti-Wear, High Pressure, and Oxidation Inhibitor Additives*
Chemical Family: *Petroleum Hydrocarbon plus additives*
Formula: *Petroleum Base Stock and Zinc Dithiophosphate*

National Fire Protection Association 704M Signal (or estimate)
Freight Class: 65
EMERGENCY NUMBER: 800-424-9300

I. HAZARDOUS INGREDIENTS - IDENTITY INFORMATION

OSHA PEL.....Paraffin Base Mixture .....*5 mg/m³ (oil mist)*
ACGIH TVL.....*5 mg/m³*
No regulated ingredients. Contains ZDDP (below reportable threshold).
Evenly refined mineral oils.
Proprietary additives.

II. PHYSICAL DATA

a. Boiling point (°F): *>400°F (>204°C)*
b. Vapor pressure (mm Hg): *Not determined.*
c. Vapor density (Air = 1): *>1*
d. Solubility in water (%): *Negligible*
e. Specific gravity (H_2O = 1): *0.88@60°F (15.6°C)*
f. Percent volatile by volume: *Negligible*
g. Evaporation rate: (n-Butyl Acetate=1) *Negligible*
h. Appearance and odor: *Greenish fluid, mild petroleum odor*
i. Melting point: *Liquid*

III. FIRE AND EXPLOSION HAZARD DATA

a. Flash point: *>392°F*
b. Ignition temperature (°F): *730 estimated*
c. Flammable limitation: *LEL 0.9% UEL: 7%*
d. Extinguishing media: *Water Fog, Foam, Co_2, Dry Chemicals*
e. Special fire fighting procedures: *Use water spray to keep fire-exposed containers cool. If leak or spill has not ignited, use water spray to disperse the vapors. Utilize air-supplied breathing equipment in confined or enclosed areas.*
f. Unusual fire and explosion hazards: *Empty containers can be dangerous; do not cut, weld, solder, drill or grind—explosion can result.*
g. HMIS Rating: *Health - 1, Fire - 1, Reactivity - 0, Special Hazard - B*

IV. HEALTH HAZARD DATA

a. Route(s) of Entry: Inhalation *Not a problem at room temperature/avoid mist*
Skin *Avoid prolonged skin contact.*
Ingestion *Possible*
b. Health Hazards (Acute and Chronic): *Prolonged or repeated skin contact may cause irritation. Eye contact can cause discomfort. Ingestion can cause gastrointestinal distress.*
c. Carcinogenicity: NTP *No*
IARC Monographs *No*
OSHA Regulated *No*
d. Medical Conditions: *Generally Aggravated by Exposure: Product has a low order of toxicity. In normal use should not be harmful.*

Emergency and First Aid Procedures:
a. Eyes: *Flush with clean, clear water until irritation subsides. If irritation persists, see a physician.*
b. Skin: *Remove contaminated clothing, wash contaminated area thoroughly with soap and water. If redness or irritation occurs, seek medical attention.*
c. Inhalation: *If overcome by inhalation of hot vapors, remove to fresh air. Seek immediate medical attention if necessary.*
e. Ingestion: *Do not induce vomiting, contact a physician.*

V. REACTIVITY DATA

a. Stability: *Stable*
b. Incompatible materials: *Strong oxidizing materials and acids.*
c. Hazardous Decomposition Products: *May form oxides of carbon, sulfur, phosphorus and nitrogen if combusted.*
d. Hazardous Polymerization: *Will not occur.*
e. Conditions to avoid: *High temperature and product contamination.*

VI. PRECAUTIONS FOR SAFE HANDLING AND USE

a. Steps to be taken in case material is released or spilled: *Contain spill with use of sorbent media. Keep spill from entering sewers or waterways.*
b. Waste disposal methods: *Disposal must be in accordance with local, state and federal regulations.*
c. Precautions to be taken in handling and storing: *Keep containers closed when not in use. Store in cool, dry area away from sources of ignition.*
d. Other precautions: *Do not pressurize, weld, cut, solder, or drill empty drums. Fumes can be explosive.*

VII. SPECIAL PROTECTION INFORMATION

a. Respiratory Protection (Specify Type): *Normally not needed.*
b. Ventilation: Local exhaust: *Not Necessary*
Mechanical (General): *Recommended*
Special: *No* Other: *No*
c. Protective Gloves: *Oil resistant.*
d. Eye Protection: *Chemical goggles, splash shield.*
e. Other Protective Clothing or Equipment: *Oil resistant apron if desired.*
f. Work/Hygienic Practices: *Launder contaminated clothing before re-use. Cleanse skin thoroughly after contact. Properly dispose of contaminated leather articles and other materials which cannot be decontaminated.*

Products described hereon are covered by one or more of the following U.S. patents 3558244, 3652188, 3800608, 3920356, 3930756 and 5035580

World Headquarters
CAT PUMPS
1681 - 94th Lane N.E. Minneapolis, MN 55449-4324
Phone (763) 780-5440 — FAX (763) 780-2958
e-mail: techsupport@catpumps.com
www.catpumps.com

International Inquiries
FAX (763) 785-4329
e-mail: intlsales@catpumps.com

The Pumps with Nine Lives

CAT PUMPS (U.K.) LTD.
1 Fleet Business Park, Sandy Lane, Church Crookham, Fleet
Hampshire GU52 8BF, England
Phone Fleet 44 1252-622031 — Fax 44 1252-626655
e-mail: sales@catpumps.co.uk

N.V. CAT PUMPS INTERNATIONAL S.A.
Helvetiastraat 6A, 2550 Kontich, Belgium
Phone 32-3-460.71.50 — Fax 32-3-460.71.51
e-mail: cpi@catpumps.be www.catpumps.be

CAT PUMPS DEUTSCHLAND GmbH
Buchwiese 2, D-65510 Idstein, Germany
Phone 49 6126-9303 0 — Fax 49 6126-9303 33
e-mail: catpumps@t-online.de www.catpumps.de

COMMANDER & H.O.

A Complete Owner Operational/Service Guide

KOHLER ENGINES MODEL: _____

SERIAL: _____

DRESSER Roots MODEL: _____

SERIAL: _____

CAT PUMPS MODEL: 5CP2120W

SERIAL: _____

NOTICE

THIS MANUAL MUST BE READ AND FULLY UNDERSTOOD BEFORE THE OPERATION OF EQUIPMENT DESCRIBED HEREIN.

COMMANDER & H.O. OWNER'S MANUAL © July 2007 v2.0 White Magic Inc. All Rights Reserved.

"OUR FUTURE DEPENDS ON YOUR COMPLETE SATISFACTION"

White Magic Inc. 11 Main Street, Salisbury, MA 01952 - TEL# (978)465-2287 - FAX# (978)462-9170 - WEB: www.whitemagicinc.com